PROJECT REFERENCE NO.	SHEET NO.
	SIG-2

PHASING DIAGRAM

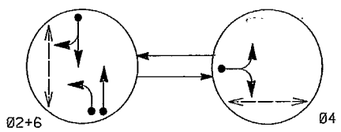

PHASING DIAGRAM
DETECTION LEGEND

- DETECTED MOVEMENT
- UNDETECTED MOVEMENT (OVERLAP)
- UNSIGNALIZED MOVEMENT
- PEDESTRIAN MOVEMENT

TABLE OF OPERATION

SIGNAL FACE	PHASE Ø2+6	PHASE Ø4	FLASH
21,22	G	R	Y
41,42	R	G	R
61,62	G	R	Y
P41,P42	DW	W	DRK
P61,P62	W	DW	DRK

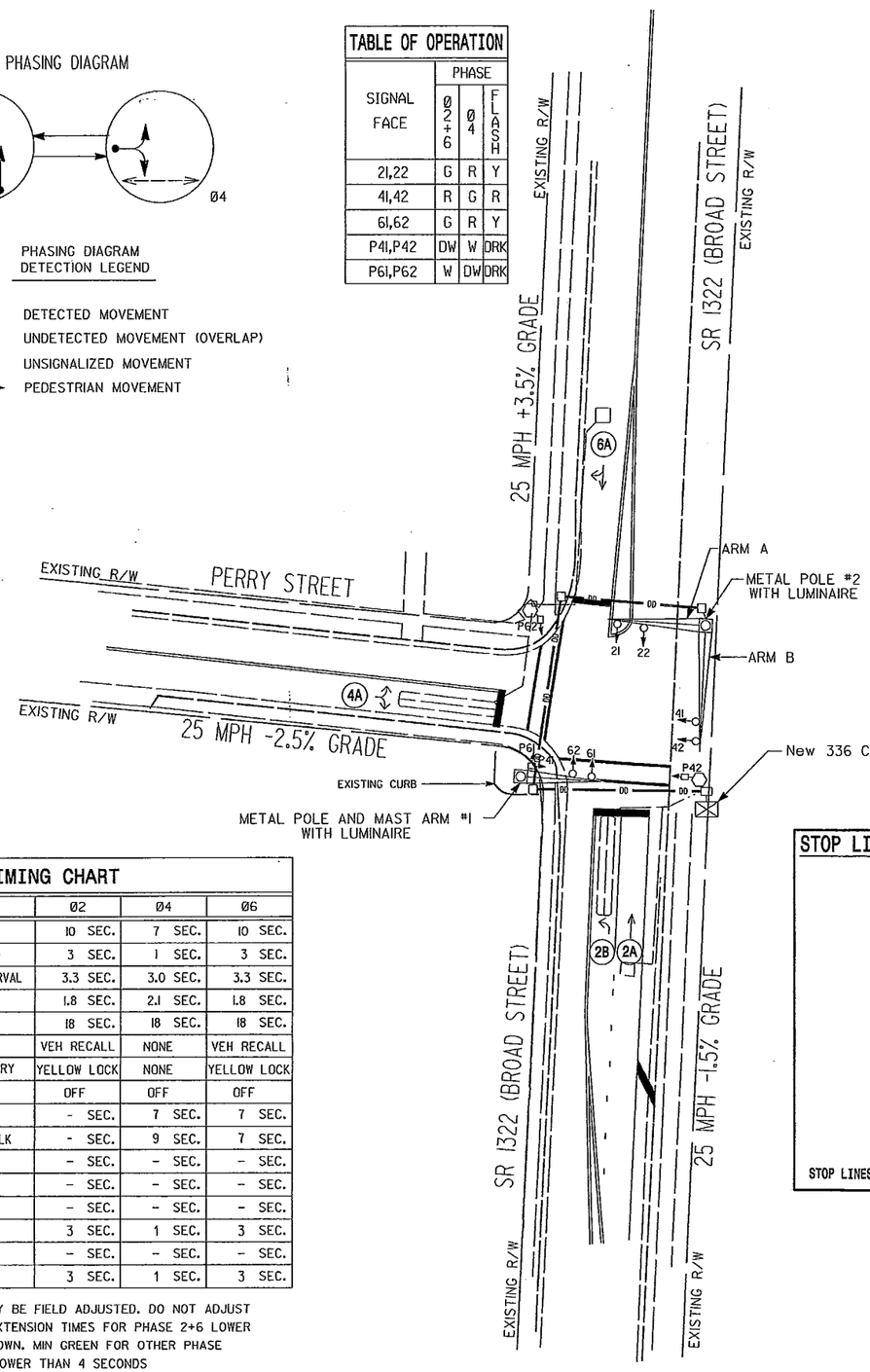

TYPE 170 CONTROLLER LOOP & DETECTION CHART

INDUCTIVE LOOPS						DETECTOR PROGRAMMING												
							TIMING		ATTRIBUTES								STATUS	
LOOP NO.	SIZE	TURNS	DIST. FROM STOPBAR	NEW	EXISTING	NEMA PHASE	DELAY	CARRY OVER (STRETCH)	1 PULSE/PRESENCE	2 PRESENCE	3 CALL	4 LOCKED	5 COUNT	6 EXTENSION	7 TYPE 3	8 QUEUING ACTIVATION	NEW	EXISTING
2A	6X6	4	70		X	Ø2	- SEC.	- SEC.					X		X			X
2B	6X40	2-4-2	0		X	Ø2	- SEC.	- SEC.					X		X			X
4A	6X40	2-4-2	0		X	Ø4	10 SEC.	- SEC.					X		X			X
6A	6X6	4	70		X	Ø6	- SEC.	- SEC.					X		X			X
PEDESTRIAN PUSHBUTTONS																		
P41, P42				X		Ø4	- SEC.	- SEC.		X							X	
P61, P62				X		Ø6	- SEC.	- SEC.		X							X	

SIGNAL FACE I.D.

DENOTES L.E.D.

12"

16" LED

P41, P42
P61, P62

21, 22
41, 42
61, 62

2-PHASE FULLY ACTUATED (DURHAM SIGNAL SYSTEM)

NOTES

1. Refer to "Roadway Standard Drawings NCDOT" dated January 2006, "Standard Specifications for Roads and Structures" dated January 2006, and all applicable sections of the latest version of the generic Project Special Provisions. The PSP can be accessed at the following website: http://www.ncdot.org/doh/preconstruct/traffic/itss
2. Do not program signal for late night flashing operation unless otherwise directed by the Engineer.
3. Set all detector units to presence mode.
4. Program all timing information into phase banks 1, 2, and 3 unless otherwise noted.
5. Set phase bank 3 maximum limit to 250 seconds for phases used.
6. Maximum times shown in timing chart are for free-run operation only. Coordinated signal system timing values supersede these values.
7. Program Pedestrian Heads to Countdown the Flashing "DON'T WALK" Time Only.
8. Omit "WALK" And Flashing "DON'T WALK" With No Pedestrian Calls.
9. Constractor shall provide all necessary soil boring information for foundation designs.
10. Contractor shall locate all existing utilities prior to commencing work. Work to be done so as to avoid conflicts with all utilities.
11. All pavement markings are existing.

TIMING CHART

PHASE	Ø2	Ø4	Ø6
MINIMUM INITIAL*	10 SEC.	7 SEC.	10 SEC.
VEHICLE EXTENSION*	3 SEC.	1 SEC.	3 SEC.
YELLOW CHANGE INTERVAL	3.3 SEC.	3.0 SEC.	3.3 SEC.
RED CLEARANCE	1.8 SEC.	2.1 SEC.	1.8 SEC.
MAXIMUM LIMIT*	18 SEC.	18 SEC.	18 SEC.
RECALL POSITION	VEH RECALL	NONE	VEH RECALL
VEHICLE CALL MEMORY	YELLOW LOCK	NONE	YELLOW LOCK
DOUBLE ENTRY	OFF	OFF	OFF
WALK*	- SEC.	7 SEC.	7 SEC.
FLASHING DON'T WALK	- SEC.	9 SEC.	7 SEC.
TYPE 3 LIMIT	- SEC.	- SEC.	- SEC.
ADD PER VEHICLE*	- SEC.	- SEC.	- SEC.
MAXIMUM INITIAL*	- SEC.	- SEC.	- SEC.
MAXIMUM GAP*	3 SEC.	1 SEC.	3 SEC.
REDUCE 0.1 EVERY*	- SEC.	- SEC.	- SEC.
MINIMUM GAP	3 SEC.	1 SEC.	3 SEC.

* THESE VALUES MAY BE FIELD ADJUSTED. DO NOT ADJUST MIN GREEN AND EXTENSION TIMES FOR PHASE 2+6 LOWER THAN WHAT IS SHOWN. MIN GREEN FOR OTHER PHASE SHOULD NOT BE LOWER THAN 4 SECONDS

STOP LINE, CROSSWALK, POLE LOCATION DIAGRAM

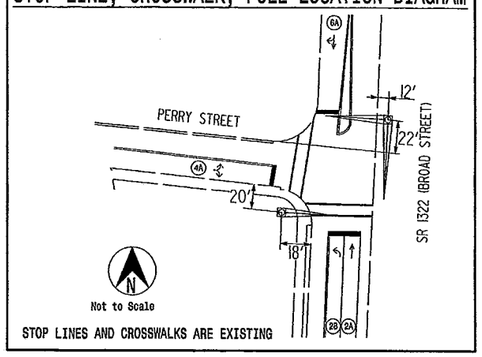

STOP LINES AND CROSSWALKS ARE EXISTING

NC DEPARTMENT OF TRANSPORTATION
DIVISION OF HIGHWAYS
FINAL DRAWING Date: 5/6/10
Traffic Engineering Branch

LEGEND

PROPOSED		EXISTING
	Traffic Signal Head	
	Modified Signal Head	N/A
	Sign	
	Pedestrian Signal Head With Push Button & Sign	
	Signal Pole with Guy	
	Signal Pole with Sidewalk Guy	
	Inductive Loop Detector	
	Controller & Cabinet	
	Junction Box	
N/A	Underground Fiber Optic Cable	
N/A	2-in Underground Conduit	
	Right of Way	
	Directional Arrow	
	Stop Bar	
	Metal Pole w/Mast Arm	
	Pedestrian Pedestal	
DD	Directional Drill	N/A

SIGNAL UPGRADE

PLANS PREPARED BY:

EARTH TECH | AECOM

F-0342
701 CORPORATE CENTER DRIVE SUITE 475
RALEIGH, NC 27607 P 919.854.6200 F 919.854.6259

750 N. Greenfield Pkwy., Garner, NC 27529

SCALE 0 30 1"=30'

SR 1322 (BROAD STREET)
AT
PERRY STREET

DIVISION 5 DURHAM CO. DURHAM

PLAN DATE:	FEBRUARY 2010	REVIEWED BY:	S NANDAGIRI
PREPARED BY:	S COX	REVIEWED BY:	N DEAN

REVISIONS	INIT.	DATE

SEAL

NORTH CAROLINA PROFESSIONAL SEAL 032123 ENGINEER SREEKANTH NANDAGIRI

Sreekanth Nandagiri 2/22/10
SIGNATURE DATE

SIG INVENTORY NO. 05-2285

PROJECT REFERENCE NO.	SHEET NO.
	SIG. 3

EDI MODEL 2010ECL CONFLICT MONITOR PROGRAMMING DETAIL

(remove jumpers and set switches as shown)

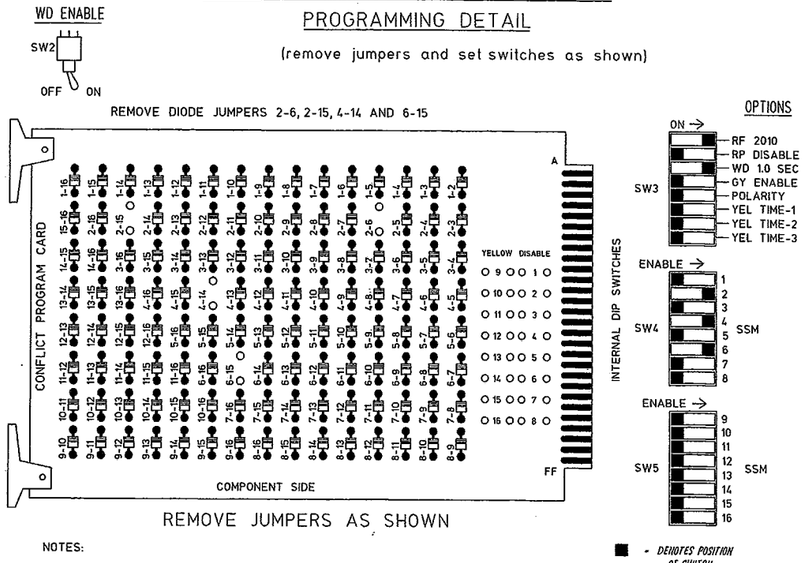

REMOVE JUMPERS AS SHOWN

NOTES:

1. Card is provided with all diode jumpers in place. Removal of any jumper allows its channels to run concurrently.
2. Make sure jumpers SEL2-SEL5 are present on the monitor board.

NOTES

1. To prevent "flash-conflict" problems, insert red flash program blocks for all unused vehicle load switches in the output file. The installer shall verify that signal heads flash in accordance with the Signal Plans.
2. To prevent red failures on unused monitor channels, see Red Monitor Board Programming this sheet.
3. Program controller to start up in phases 2 and 6 green.
4. Set power-up flash time to 7 seconds and implement within the controller programming.
5. Enable simultaneous gap-out feature, on the controller unit, for all phases.
6. Ensure start up flash phases are coordinated with flash program block assignments
7. This controller and cabinet are to be programmed and wired to be a part of the Durham Computerized Signal System. The Contractor is responsible for the proper interconnection of this signal within the system.

SIGNAL HEAD HOOK-UP CHART

LOAD SWITCH NO.	S1	S2	S2P	S3	S4	S4P	S5	S6	S6P	S7	S8	S8P
PHASE	1	2	2 PED	3	4	4 PED	5	6	6 PED	7	8	8 PED
SIGNAL HEAD NO.	NU	21,22	NU	NU	41,42	P41, P42	NU	61,62	P61, P62	NU	NU	NU
RED		128			101			134				
YELLOW		129			102			135				
GREEN		130			103			136				
RED ARROW												
YELLOW ARROW												
GREEN ARROW												
✋						104			119			
🚶						106			121			

NU = Not Used

EQUIPMENT INFORMATION

CONTROLLER.....McCAIN TRAFFIC TYPE 170E
CABINET .....McCAIN TRAFFIC MODEL 336
SOFTWARE .....BI TRANS 233NC2×
CABINET MOUNT.....POLE
OUTPUT FILE POSITIONS.....12
LOAD SWITCHES USED.....S2,S4,S4P,S6,S6P
PHASES USED.....2,4,4PED,6,6PED
OVERLAPS.....NONE

×Software to be provided by City of Durham.

INPUT FILE POSITION LAYOUT

(front view)

FILE "|"		1	2	3	4	5	6	7	8	9	10	11	12	13	14
	U	SLOT EMPTY	Ø2 2A	SLOT EMPTY	Ø4 4A	SLOT EMPTY	Ø6 6A	SLOT EMPTY	SLOT EMPTY	DOOR AJAR DC ISOLATOR	SLOT EMPTY	ADVANCE DC ISOLATOR	NOT USED	Ø6 PED DC ISOLATOR	FS DC ISOLATOR
	L		Ø2 2B		NOT USED		NOT USED			NOT USED		ADVANCE ENABLE DC ISOLATOR	Ø4 PED DC ISOLATOR	NOT USED	ST DC ISOLATOR

EX.: 1A, 2A, ETC. = LOOP NO.'S

FS = FLASH SENSE
ST = STOP TIME

RED MONITOR BOARD PROGRAMMING

(position jumpers as shown below)

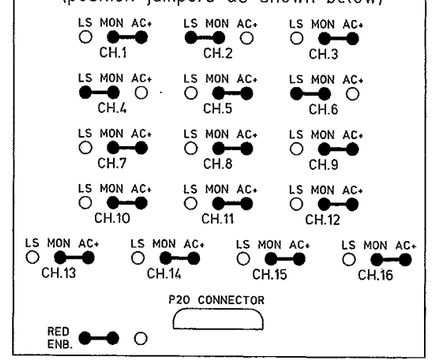

COUNTDOWN PEDESTRIAN SIGNAL OPERATION

Countdown Ped Signals are required to display timing only during Ped Clearance Interval. Consult Ped Signal Module user's manual for instructions on selecting this feature.

PEDESTRIAN PHASE PROGRAMMING

PROGRAM PEDESTRIAN OUTPUTS 4P AND 6P
AT KEYPAD INPUT E/125+F+6=Ø6,
AT KEYPAD INPUT E/125+F+7=Ø4.

INPUT FILE CONNECTION & PROGRAMMING CHART

LOOP NO.	LOOP TERMINAL	INPUT FILE POS.	DETECTOR NO.	PIN NO.	ATTRIBUTES	NEMA PHASE
2A	TB21-3,4	12U	1	39	5 7	2
2B	TB23-3,4	12L	2	43	5 7	2
4A	TB21-7,8	14U	3	41	5 7	4
6A	TB21-11,12	16U	4	40	5 7	6
PEDESTRIAN DETECTION						
P41,P42	TB24-9,10	112L	5	69	2	4PED
P61,P62	TB22-11,12	113U	6	68	2	6PED

NOTE: Program detector delay and carryover times as specified on signal design plans.

INPUT FILE POSITION LEGEND: J2L
FILE J
SLOT 2
LOWER

DETECTOR ATTRIBUTES LEGEND:

1-FULL TIME DELAY
2-PED CALL
3-RESERVED
4-COUNTING
5-EXTENSION
6-TYPE 3
7-CALLING
8-ALTERNATE

THIS ELECTRICAL DETAIL IS FOR
THE SIGNAL DESIGN: 05-2285
DESIGNED: February 2010
SEALED: February 22, 2010
REVISED:

SIGNAL SYSTEM DATA:	
Drop	13
Area	3
Area Address	33
Comm Channel	FT-5

NC DEPARTMENT OF TRANSPORTATION
DIVISION OF HIGHWAYS
FINAL DRAWING Date: 5/6/10
R 9/1
Traffic Engineering Branch

DURHAM 1869 CITY OF MEDICINE

City of Durham
101 City Hall Plaza
Durham, NC 27701

SIGNAL UPGRADE

Traffic Engineering and Safety Systems Branch
STATE OF NORTH CAROLINA DEPARTMENT OF TRANSPORTATION
Signals and Geometrics Section
750 Greenfield Pkwy, Garner, NC 27529

SR 1322 (BROAD STREET)
AT
PERRY STREET

DIVISION 5 DURHAM COUNTY DURHAM

PLAN DATE: FEBRUARY 2009	REVIEWED BY: P. LOZIUK		
PREPARED BY: L. TRACEY	REVIEWED BY: P. NICHOLAS		
REVISIONS		INIT.	DATE

SEAL NORTH CAROLINA PROFESSIONAL ENGINEER SEAL 032040 PETER JOSEPH NICHOLAS

SIGNATURE 4-21-10 DATE

SIG. INVENTORY NO. 05-2285

PROJECT REFERENCE NO.	SHEET NO.
	SIG-4

Design Loading for METAL POLE NO. 1

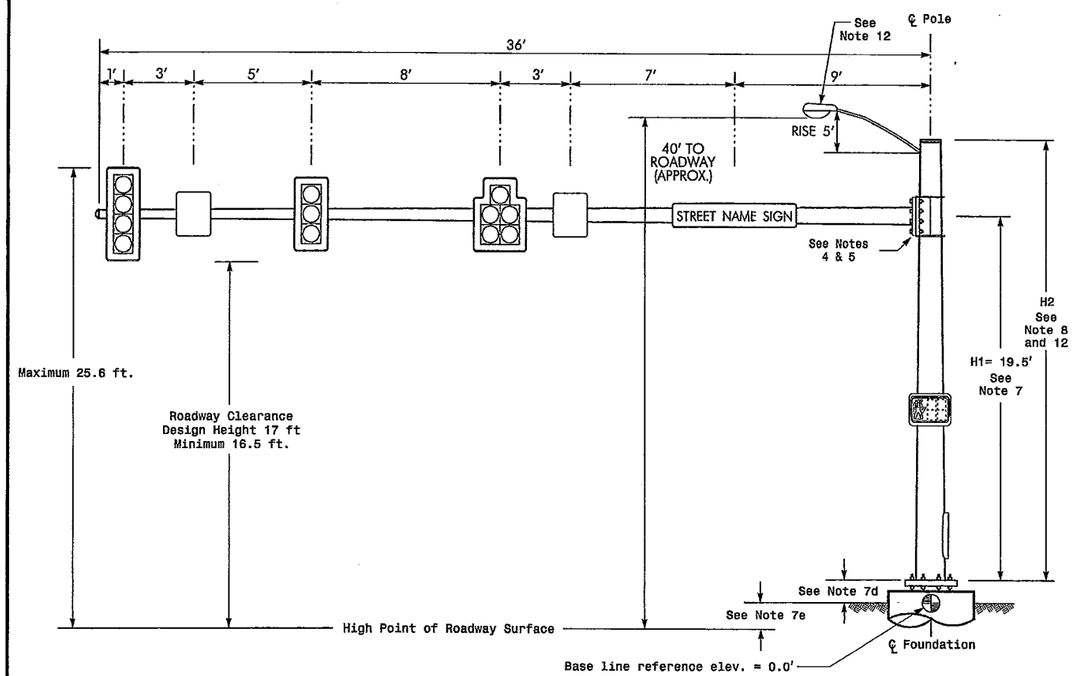

Elevation View

SPECIAL NOTE

The contractor is responsible for verifying that the mast arm attachment height (H1) will provide the "Design Height" clearance from the roadway before submitting final shop drawings for approval. Verify elevation data below which was obtained by field measurement or from available project survey data.

Elevation Data for Mast Arm Attachment (H1)

Elevation Differences for:	Pole 1
Baseline reference point at ℄ Foundation @ ground level	0.0 ft.
Elevation difference at High point of roadway surface	+0.4 ft.
Elevation difference at Edge of travelway or face of curb	-0.8 ft.

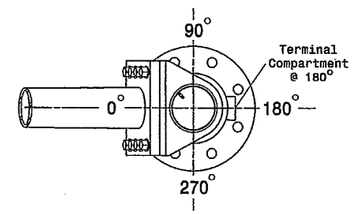

POLE RADIAL ORIENTATION

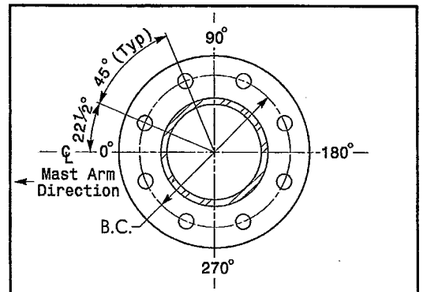

8 BOLT BASE PLATE DETAIL

See Note 6

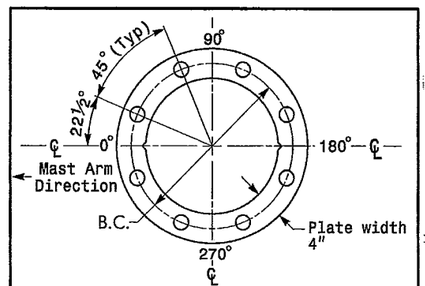

BASE PLATE TEMPLATE & ANCHOR BOLT LOCK PLATE DETAIL

For 8 Bolt Base Plate

MAST ARM LOADING SCHEDULE

LOADING SYMBOL	DESCRIPTION	AREA	SIZE	WEIGHT
	SIGNAL HEAD 12"-4 SECTION-WITH BACKPLATE AND ASTRO-BRAC	11.7 S.F.	25.5" W X 66.0" L	74 LBS
	SIGNAL HEAD 12"-3 SECTION-WITH BACKPLATE AND ASTRO-BRAC	9.3 S.F.	25.5" W X 52.5" L	60 LBS
	SIGNAL HEAD 12"-5 SECTION-WITH BACKPLATE AND ASTRO-BRAC	16.3 S.F.	42.0" W X 56.0" L	103 LBS
	SIGN RIGID MOUNTED WITH ASTRO-SIGN-BRAC	5.0 S.F.	24.0" W X 30.0" L	11 LBS
STREET NAME SIGN	STREET NAME SIGN RIGID MOUNTED WITH ASTRO-SIGN-BRAC	12.0 S.F.	18.0" W X 96.0" L	27 LBS
	LUMINAIRE (Power Door Cobrahead) AEL ROADWAY SERIES 325	6.4 S.F.	22.0" W X 42.0" L	43 LBS
	PEDESTRIAN SIGNAL HEAD WITH MOUNTING HARDWARE	2.2 S.F.	18.5" W X 17.0" L	21 LBS

NOTES

Design Reference Material

1. Design the traffic signal structure and foundation in accordance with:
   - The 4th Edition 2001 AASHTO "Standard Specifications for Structural Supports for Highway Signs, Luminaires, and Traffic Signals, including all of the latest interim revisions.
   - The 2006 NCDOT "Standard Specifications for Roads and Structures". The latest addenda to these specifications can be found in the traffic signal project special provisions.
   - The 2006 NCDOT Roadway Standard Drawings.
   - The traffic signal project plans and special provisions.
   - The NCDOT "Metal Pole Standards" located at the following NCDOT website: https/www.ncdot.org/doh/preconstruct/traffic/tss/wsmpoles/poles.html

Design Requirements

2. Design the traffic signal structure using the loading conditions shown in the elevation views. These are anticipated worst case "Design loads" and may not represent the actual loads that will be applied at the time of the installation. The contractor should refer to the traffic signal plans for the actual loads that will be applied at the time of the installation.
3. Maximum allowable CSR for all signal supports is 0.9.
4. The camber design for mast arm deflection should provide an appearance of a low pitched arch where the tip or the free end of the mast arm does not deflect below horizontal when fully loaded.
5. A clamp-type bolted mast arm-to-pole connection may be used instead of the welded ring stiffened box connection shown as long as the connection meets all of the design requirements. This is a high strength connection. Use Direct Tension Indicators (ASTM F959) for each bolt.
6. Design base plate with 8 anchor bolt holes. Provide 2 inch x 60 inch anchor bolts.
7. The mast arm attachment height (H1) shown is based on the following design assumptions:
   a. Mast arm slope and deflection are not considered in determining the arm attachment height as they are assumed to offset each other.
   b. Signal heads attached to the mast arm are rigid mounted and vertically centered on the arm.
   c. The roadway clearance height for design is as shown in the elevation views.
   d. The top of the pole base plate is .75 feet above the ground elevation.
   e. Refer to the Elevation Data chart for elevation differences between the proposed foundation ground level and the high point on the roadway.
8. The pole manufacturer will determine the total height (H2) of each pole based on the luminaire height requirement of 40 feet over the roadway.
9. If pole location adjustments are required, the contractor must gain approval from the engineer as this may affect the mast arm lengths and arm attachment heights. The contractor may contact the Signals Structural Engineer for assistance at (919) 773-2800.
10. The contractor is responsible for verifying that the mast arm length shown will allow proper positioning of the signal heads over the roadway.
11. The contractor is responsible for providing soil penetration testing data (SPT) to the pole manufacturer so site specific foundations can be designed.
12. The Contractor shall verify luminaire mounting height before preparing shop drawings.

NC DEPARTMENT OF TRANSPORTATION
DIVISION OF HIGHWAYS
FINAL DRAWING Date: 5/6/10
Traffic Engineering Branch

PLANS PREPARED BY:

EARTH TECH | AECOM

F-0342

701 CORPORATE CENTER DRIVE SUITE 475
RALEIGH, NC 27607 P 919.854.6200 F 919.854.6259

SIGNAL UPGRADE

NCDOT WIND ZONE 4 (90mph)

Traffic Engineering and Safety Systems Branch — Intelligent Transportation Systems — STATE OF NORTH CAROLINA DEPARTMENT OF TRANSPORTATION
750 N. Greenfield Pkwy., Garner, NC 27529

SR 1322 (BROAD STREET) AND PERRY STREET

DIVISION 5 DURHAM CO. DURHAM, NC

PLAN DATE:	FEBRUARY 2010	REVIEWED BY:	S NANDAGIRI
PREPARED BY:	S COX	REVIEWED BY:	N DEAN

REVISIONS	INIT.	DATE

SEAL

NORTH CAROLINA PROFESSIONAL SEAL 032123 ENGINEER SREEKANTH NANDAGIRI

Sreekanth Nandagiri 2/22/10
SIGNATURE DATE

SIG INVENTORY NO. 06-2285

Design Loading for METAL POLE NO. 2, MAST ARM A

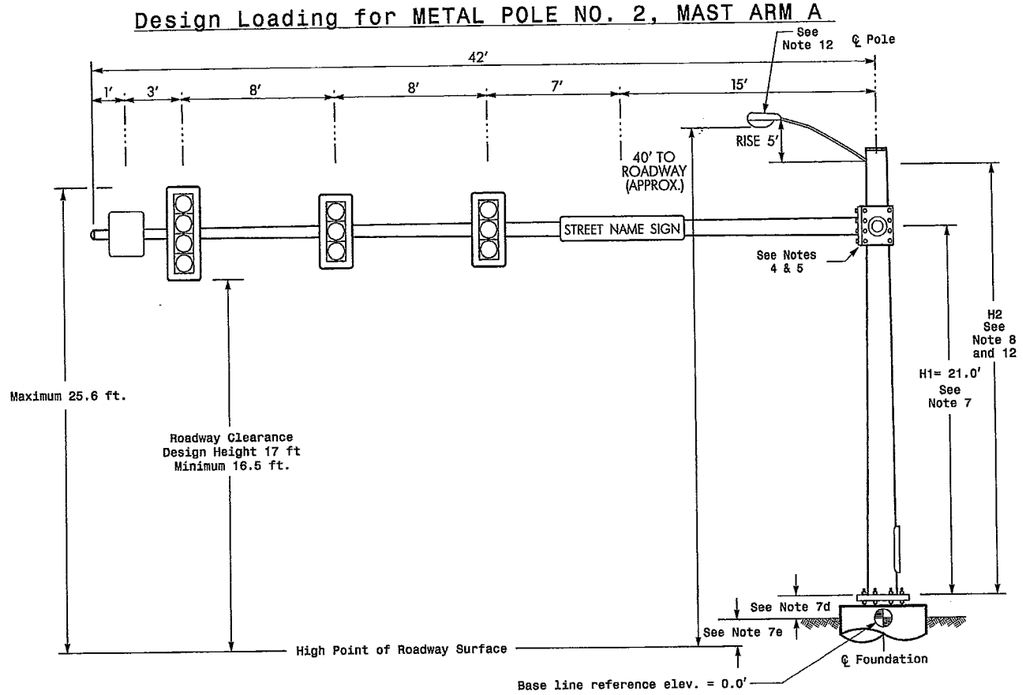

Elevation View @ 0°

Design Loading for METAL POLE NO. 2, MAST ARM B

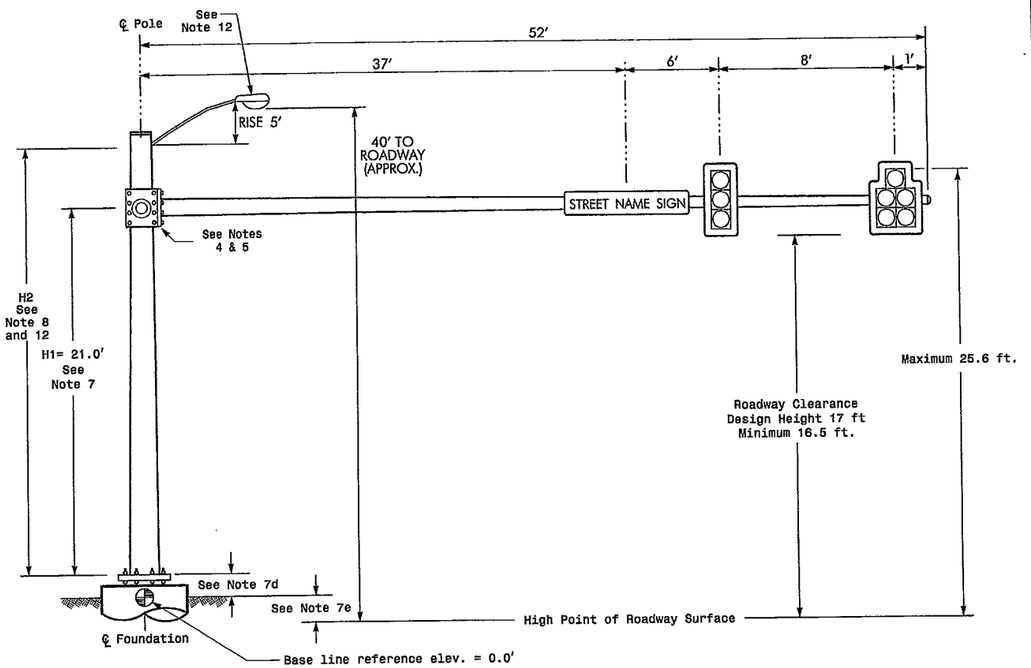

Elevation View @ 270°

SPECIAL NOTE

The contractor is responsible for verifying that the mast arm attachment height (H1) will provide the "Design Height" clearance from the roadway before submitting final shop drawings for approval. Verify elevation data below which was obtained by field measurement or from available project survey data.

Elevation Data for Mast Arm Attachment (H1)

Elevation Differences for:	Arm "A"	Arm "B"
Baseline reference point at ℄ Foundation @ ground level	0.0 ft.	0.0 ft.
Elevation difference at High point of roadway surface	+1.14 ft.	+1.96 ft.
Elevation difference at Edge of travelway or face of curb	-0.42 ft.	N/A

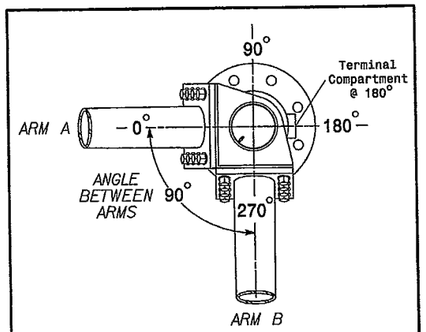

POLE RADIAL ORIENTATION

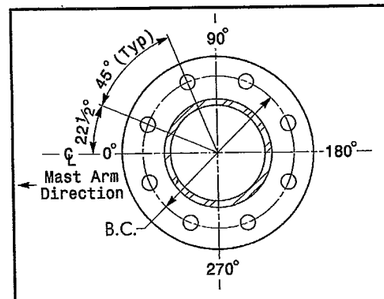

8 BOLT BASE PLATE DETAIL

See Note 6

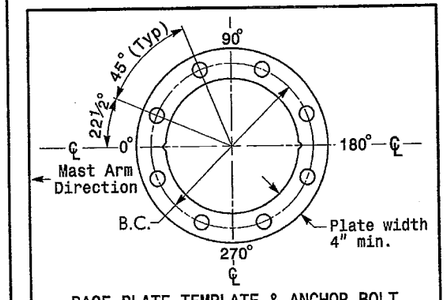

BASE PLATE TEMPLATE & ANCHOR BOLT LOCK PLATE DETAIL

For 8 Bolt Base Plate

MAST ARM LOADING SCHEDULE

LOADING SYMBOL	DESCRIPTION	AREA	SIZE	WEIGHT
	SIGNAL HEAD 12"-4 SECTION-WITH BACKPLATE AND ASTRO-BRAC	11.7 S.F.	25.5" W X 66.0" L	74 LBS
	SIGNAL HEAD 12"-3 SECTION-WITH BACKPLATE AND ASTRO-BRAC	9.3 S.F.	25.5" W X 52.5" L	60 LBS
	SIGNAL HEAD 12"-5 SECTION-WITH BACKPLATE AND ASTRO-BRAC	16.3 S.F.	42.0" W X 56.0" L	103 LBS
	SIGN RIGID MOUNTED WITH ASTRO-SIGN-BRAC	5.0 S.F.	24.0" W X 30.0" L	11 LBS
STREET NAME SIGN	STREET NAME SIGN RIGID MOUNTED WITH ASTRO-SIGN-BRAC	12.0 S.F.	18.0" W X 96.0" L	27 LBS
	LUMINAIRE (Power Door Cobrahead) AEL ROADWAY SERIES 325	6.4 S.F.	22.0" W X 42.0" L	43 LBS
	PEDESTRIAN SIGNAL HEAD WITH MOUNTING HARDWARE	2.2 S.F.	18.5" W X 17.0" L	21 LBS

NOTES

Design Reference Material

1. Design the traffic signal structure and foundation in accordance with:
   - The 4th Edition 2001 AASHTO "Standard Specifications for Structural Supports for Highway Signs, Luminaires, and Traffic Signals, including all of the latest interim revisions.
   - The 2006 NCDOT "Standard Specifications for Roads and Structures". The latest addenda to these specifications can be found in the traffic signal project special provisions.
   - The 2006 NCDOT Roadway Standard Drawings.
   - The traffic signal project plans and special provisions.
   - The NCDOT "Metal Pole Standards" located at the following NCDOT website: http://www.ncdot.org/doh/preconstruct/traffic/tss/ws/mpoles/poles.html

Design Requirements

2. Design the traffic signal structure using the loading conditions shown in the elevation views. These are anticipated worst case "Design loads" and may not represent the actual loads that will be applied at the time of the installation. The contractor should refer to the traffic signal plans for the actual loads that will be applied at the time of the installation.
3. Maximum allowable CSR for all signal supports is 0.9.
4. The camber design for mast arm deflection should provide an appearance of a low pitched arch where the tip or the free end of the mast arm does not deflect below horizontal when fully loaded.
5. A clamp-type bolted mast arm-to-pole connection may be used instead of the welded ring stiffened box connection shown as long as the connection meets all of the design requirements. This is a high strength connection. Use Direct Tension Indicators (ASTM F959) for each bolt.
6. Design base plate with 8 anchor bolt holes. Provide 2 inch x 60 inch anchor bolts.
7. The mast arm attachment height (H1) shown is based on the following design assumptions:
   a. Mast arm slope and deflection are not considered in determining the arm attachment height as they are assumed to offset each other.
   b. Signal heads attached to the mast arm are rigid mounted and vertically centered on the arm.
   c. The roadway clearance height for design is as shown in the elevation views.
   d. The top of the pole base plate is .75 feet above the ground elevation.
   e. Refer to the Elevation Data chart for elevation differences between the proposed foundation ground level and the high point on the roadway.
8. The pole manufacturer will determine the total height (H2) of each pole based on the luminaire height requirement of 40 feet over the roadway.
9. If pole location adjustments are required, the contractor must gain approval from the engineer as this may affect the mast arm lengths and arm attachment heights. The contractor may contact the Signals Structural Engineer for assistance at (919) 773-2800.
10. The contractor is responsible for verifying that the mast arm length shown will allow proper positioning of the signal heads over the roadway.
11. The contractor is responsible for providing soil penetration testing data (SPT) to the pole manufacturer so site specific foundations can be designed.
12. The Contractor shall verify luminaire mounting height before preparing shop drawings.

NC DEPARTMENT OF TRANSPORTATION
DIVISION OF HIGHWAYS
FINAL DRAWING Date: 5/6/10
Traffic Engineering Branch

PLANS PREPARED BY:

EARTH TECH | AECOM

F-0342

701 CORPORATE CENTER DRIVE SUITE 475
RALEIGH, NC 27607 P 919.854.6200 F 919.854.6259

NCDOT Wind Zone 4 (90 mph)

Traffic Engineering and Safety Systems Branch — STATE OF NORTH CAROLINA — DEPARTMENT OF TRANSPORTATION — Intelligent Transportation Systems
750 N. Greenfield Pkwy., Garner, NC 27529

SR 1322 (BROAD STREET)
AT
PERRY STREET

DIVISION 5 DURHAM CO. DURHAM, NC

PLAN DATE: FEBRUARY 2010	REVIEWED BY: S NANDAGIRI		
PREPARED BY: S COX	REVIEWED BY: N DEAN		
REVISIONS		INIT.	DATE

SEAL

NORTH CAROLINA PROFESSIONAL SEAL 032123 ENGINEER SREEKANTH NANDAGIRI

Sreekanth Nandagiri 2/22/10
SIGNATURE DATE

SIG. INVENTORY NO. 05-2285

8:40:03 AM
D:\0104282\Codes\Broad-Perry_Sig_pole_05.dgn
cokes1

PROJECT REFERENCE NO.	SHEET NO.
	ITS-1

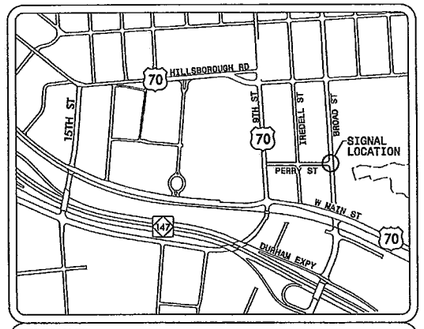

VICINITY MAP

STATE OF NORTH CAROLINA
DIVISION OF HIGHWAYS

DURHAM COUNTY

LOCATION: NORTH OF US 70 AND SOUTH OF W MARKHAM ROAD

TYPE OF WORK: COMMUNICATIONS CABLE AND CONDUIT ROUTING

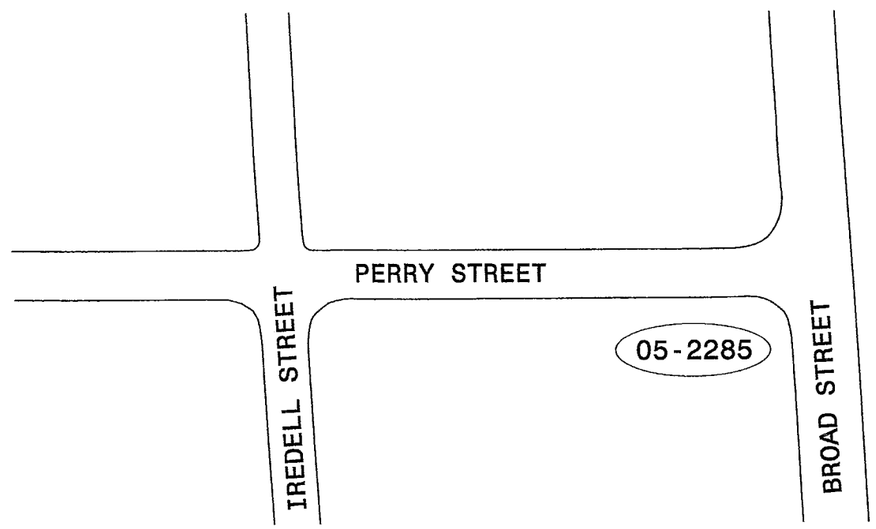

NC DEPARTMENT OF TRANSPORTATION
DIVISION OF HIGHWAYS
FINAL DRAWING Date: 5/6/10
Traffic Engineering Branch

PLANS PREPARED BY:

EARTH TECH | AECOM

F-0342
701 CORPORATE CENTER DRIVE SUITE 475
RALEIGH, NC 27607 P 919.854.6200 F 919.854.6259

750 N. Greenfield Pkwy., Garner, NC 27529

SCALE

COMMUNICATIONS CABLE AND CONDUIT ROUTING PLANS AND UTILITY MAKE READY PLANS

DIVISION 5	DURHAM COUNTY		DURHAM, NC
PLAN DATE: FEBRUARY 2010		REVIEWED BY:	N DEAN
PREPARED BY: S COX		REVIEWED BY:	S NANDAGIRI

REVISIONS	INIT.	DATE

SEAL

NORTH CAROLINA PROFESSIONAL SEAL 032123 ENGINEER SEEKANTH NANDAGIRI

Seekanth Nandagiri 2/22/10
SIGNATURE DATE

CADD FILE NAME

PROJECT REFERENCE NO.	SHEET NO.
	ITS-2

1. INSTALL REA, PE – 22, SHIELDED, TWISTED PAIR COMMUNICATIONS CABLE
2. INSTALL REA, PE – 38, (FIGURE – 8) SHIELDED, TWISTED PAIR COMMUNICATIONS CABLE
3. INSTALL REA, PE – 39, (UNDERGROUND) SHIELDED, TWISTED PAIR COMMUNICATIONS CABLE
4. INSTALL SMFO CABLE
5. INSTALL MMFO CABLE
6. INSTALL FIBER OPTIC DROP CABLE
7. INSTALL TRACER WIRE
8. TRENCH
9. INSTALL PVC CONDUIT
10. INSTALL RIGID, GALVANIZED STEEL CONDUIT
11. INSTALL RIGID, GALVANIZED STEEL RISER WITH WEATHERHEAD
12. INSTALL RIGID, GALVANIZED STEEL RISER WITH FIBER OPTIC CABLE SEAL
13. INSTALL OUTER-DUCT POLYETHYLENE CONDUIT
14. INSTALL POLYETHYLENE CONDUIT
15. DIRECTIONAL DRILL CONDUIT
16. BORE AND JACK CONDUIT
17. INSTALL CABLE(S) IN EXISTING CONDUIT
18. INSTALL CABLE(S) IN NEW CONDUIT
19. INSTALL CABLE(S) IN EXISTING RISER
20. INSTALL CABLE(S) IN NEW RISER
21. INSTALL CABLE(S) IN EXISTING CONDUIT STUBOUTS
22. INSTALL NEW CONDUIT INTO EXISTING CABINET BASE (USE EXISTING CONDUIT STUB-OUTS WHEN AVAILABLE)
23. INSTALL NEW RISER INTO EXISTING CABINET BASE (USE EXISTING CONDUIT STUB-OUTS WHEN AVAILABLE)
24. INSTALL NEW CONDUIT INTO EXISTING POLE MOUNTED CABINET
25. INSTALL NEW RISER INTO EXISTING POLE MOUNTED CABINET
26. TERMINATE COMMUNICATIONS CABLE ON EXISTING TELEMETRY INTERFACE PANEL IN TRAFFIC SIGNAL CONTROLLER CABINET
27. INSTALL NEW TELEMETRY INTERFACE PANEL IN TRAFFIC SIGNAL CONTROLLER CABINET
28. INSTALL INTERCONNECT CENTER, PATCH PANEL, JUMPERS, AND FUSION SPLICE CABLE IN CABINET
29. INSTALL UNDERGROUND SPLICE ENCLOSURE
30. INSTALL AERIAL SPLICE ENCLOSURE
31. INSTALL POLE MOUNTED SPLICE CABINET
32. INSTALL BASE MOUNTED SPLICE CABINET
33. REMOVE EXISTING SPLICE CABINET
34. INSTALL CABINET FOUNDATION
35. REMOVE EXISTING CABINET FOUNDATION
36. INSTALL CCTV CAMERA ASSEMBLY
37. INSTALL CCTV CAMERA WOOD POLE
38. INSTALL CCTV CAMERA METAL POLE AND FOUNDATION
39. INSTALL JUNCTION BOX
40. INSTALL OVERSIZED JUNCTION BOX
41. REMOVE EXISTING JUNCTION BOX
42. INSTALL WOOD POLE
43. REMOVE EXISTING WOOD POLE
44. INSTALL AERIAL GUY ASSEMBLY
45. INSTALL STANDARD GUY ASSEMBLY
46. INSTALL SIDEWALK GUY ASSEMBLY
47. INSTALL MESSENGER CABLE
48. REMOVE EXISTING COMMUNICATIONS CABLE AND MESSENGER CABLE
49. REMOVE EXISTING COMMUNICATIONS CABLE
50. INSTALL TELEPHONE SERVICE
51. INSTALL CABLE STORAGE RACKS (SNOW SHOES) AND STORE 100 FEET OF CABLE
52. INSTALL DELINEATOR MARKER
53. STORE 20 FEET OF COMMUNICATIONS CABLE
54. LASH CABLE(S) TO EXISTING SIGNAL/COMMUNICATIONS CABLE
55. LASH CABLE(S) TO EXISTING MESSENGER CABLE
56. LASH CABLE(S) TO NEW MESSENGER CABLE
57. MODIFY EXISTING ELECTRICAL SERVICE
58. INSTALL NEW ELECTRICAL SERVICE
59. STORE 100 FEET OF COMMUNICATIONS CABLE
60. SPLICE NEW CABLE IN EXISTING SPLICE ENCLOSURE

LEGEND

- FO — NEW FIBER OPTIC COMMUNICATIONS CABLE
- TWIST PR — NEW TWISTED PAIR COMMUNICATIONS CABLE
- EXI — EXISTING COMMUNICATIONS CABLE
- REM — EXISTING COMMUNICATIONS CABLE TO BE REMOVED
- NEW AERIAL GUY ASSEMBLY
- NEW CONDUIT
- EXISTING CONDUIT
- DD — NEW DIRECTIONAL DRILLED CONDUIT
- NEW BORED AND JACKED CONDUIT
- NEW JUNCTION BOX
- EXISTING JUNCTION BOX
- NEW WOOD POLE
- EXISTING WOOD POLE
- S — NEW AERIAL SPLICE ENCLOSURE
- NEW METAL POLE
- EXISTING METAL POLE
- NEW CCTV CAMERA ASSEMBLY
- NEW STANDARD GUY ASSEMBLY
- NEW STANDARD GUY USING EXISTING ANCHOR
- NEW SIDEWALK GUY ASSEMBLY
- NEW CABLE STORAGE RACKS (SNOW SHOES)
- EXISTING CONTROLLER AND CABINET
- S — EXISTING SPLICE CABINET
- S — NEW SPLICE CABINET
- SP — SIGNAL POLE
- XX-XXXX — SIGNAL INVENTORY NUMBER

CONSTRUCTION NOTE SYMBOLOGY KEY

- XX — INDICATES NUMBER OF CABLES, LOOPS, ETC.
- XX — INDICATES NUMBER OF FIBERS PER CABLE, TWISTED PAIRS PER CABLE, ETC.
- XX — INDICATES NUMBER OF RISER(S)/CONDUIT(S)
- XX — INDICATES DIAMETER OF RISER(S)/CONDUIT(S) (INCH)

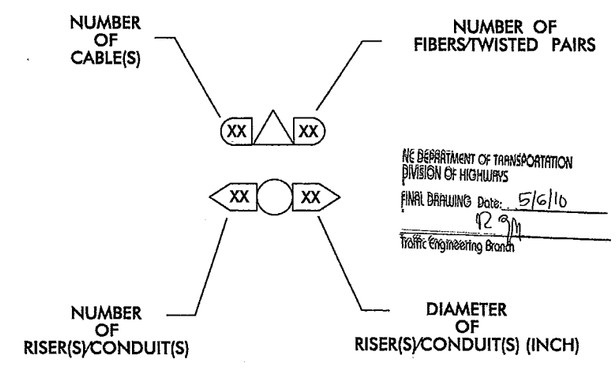

NC DEPARTMENT OF TRANSPORTATION
DIVISION OF HIGHWAYS
FINAL DRAWING Date: 5/6/10
Traffic Engineering Branch

PLANS PREPARED BY:

EARTH TECH | AECOM

F-0342

701 CORPORATE CENTER DRIVE SUITE 475
RALEIGH, NC 27607 P 919.854.6200 F 919.854.6259

750 N. Greenfield Pkwy., Garner, NC 27529

SCALE: 0 NTS — N/A

CONSTRUCTION NOTES

PLAN DATE:	FEBRUARY 2010	REVIEWED BY:	S NANDAGIRI
PREPARED BY:	SCOX	REVIEWED BY:	N DEAN

REVISIONS	INIT.	DATE

SEAL

NORTH CAROLINA PROFESSIONAL SEAL 032123 ENGINEER SREEKANTH NANDAGIRI

SREEKANTH NANDAGIRI 2/22/10
SIGNATURE DATE

CADD FILE NAME

PROJECT REFERENCE NO.	SHEET NO.
	ITS-3

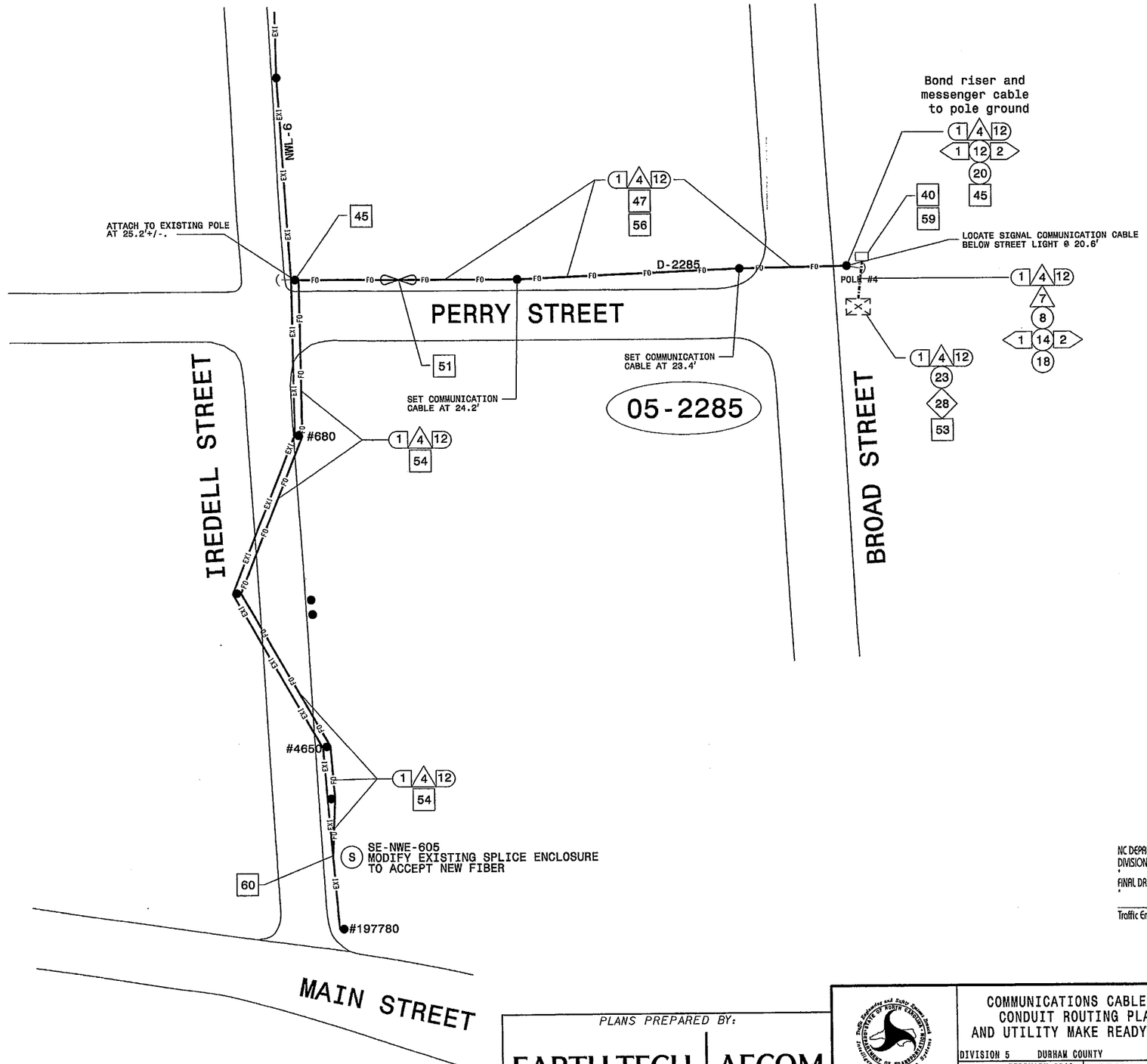

NC DEPARTMENT OF TRANSPORTATION
DIVISION OF HIGHWAYS

FINAL DRAWING Date: 5/6/10

Traffic Engineering Branch

PLANS PREPARED BY:

EARTH TECH | AECOM

F-0342

701 CORPORATE CENTER DRIVE SUITE 475
RALEIGH, NC 27607 P 919.854.6200 F 919.854.6259

750 N. Greenfield Pkwy., Garner, NC 27529

SCALE 0 NTS

COMMUNICATIONS CABLE AND CONDUIT ROUTING PLANS AND UTILITY MAKE READY PLANS

DIVISION 5	DURHAM COUNTY		DURHAM, NC
PLAN DATE:	FEBRUARY 2010	REVIEWED BY:	N DEAN
PREPARED BY:	S COX	REVIEWED BY:	S NANDAGIRI

REVISIONS	INIT.	DATE

SEAL

NORTH CAROLINA PROFESSIONAL SEAL 032123 ENGINEER SREEKANTH NANDAGIRI

Sreekanth Nandagiri 2/22/10
SIGNATURE DATE

CADD FILE NAME

PROJECT REFERENCE NO.	SHEET NO.
	ITS-4

IREDELL STREET
AT
NC BUSINESS 70 (MAIN STREET)

SIG. INV. 05-2285

Notes:
Unused fibers left coiled and stored in splice tray.

LEGEND
X = FUSION SPLICE

COLOR CODE TIA/EIA 598-A	
(1) BLUE	(7) RED
(2) ORANGE	(8) BLACK
(3) GREEN	(9) YELLOW
(4) BROWN	(10) VIOLET
(5) SLATE	(11) ROSE
(6) WHITE	(12) AQUA

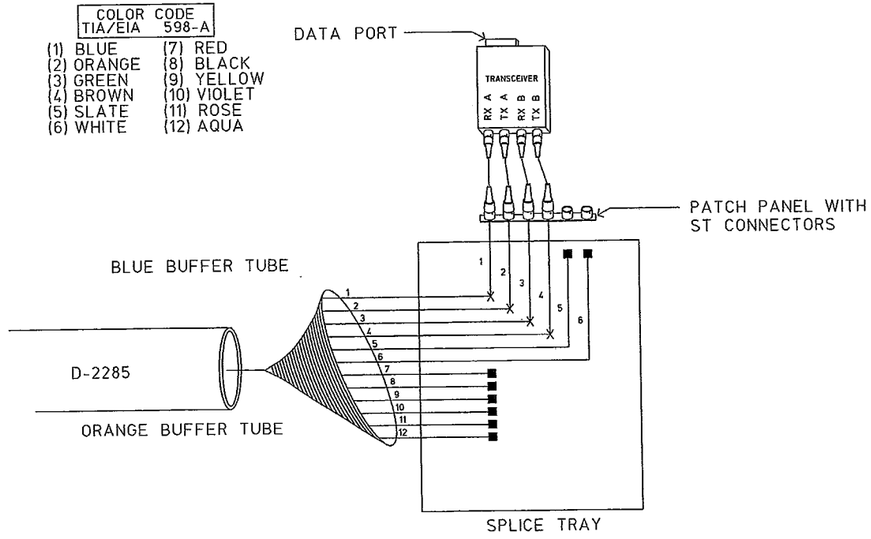

NEW SPLICE ENCLOSURE
NWE 605
IREDELL STREET
AT
NC BUSINESS 70 (MAIN STREET)

Notes:
Unused fibers left coiled and stored in enclosure.

LEGEND
X = FUSION SPLICE

COLOR CODE TIA/EIA 598-A	
(1) BLUE	(7) RED
(2) ORANGE	(8) BLACK
(3) GREEN	(9) YELLOW
(4) BROWN	(10) VIOLET
(5) SLATE	(11) ROSE
(6) WHITE	(12) AQUA

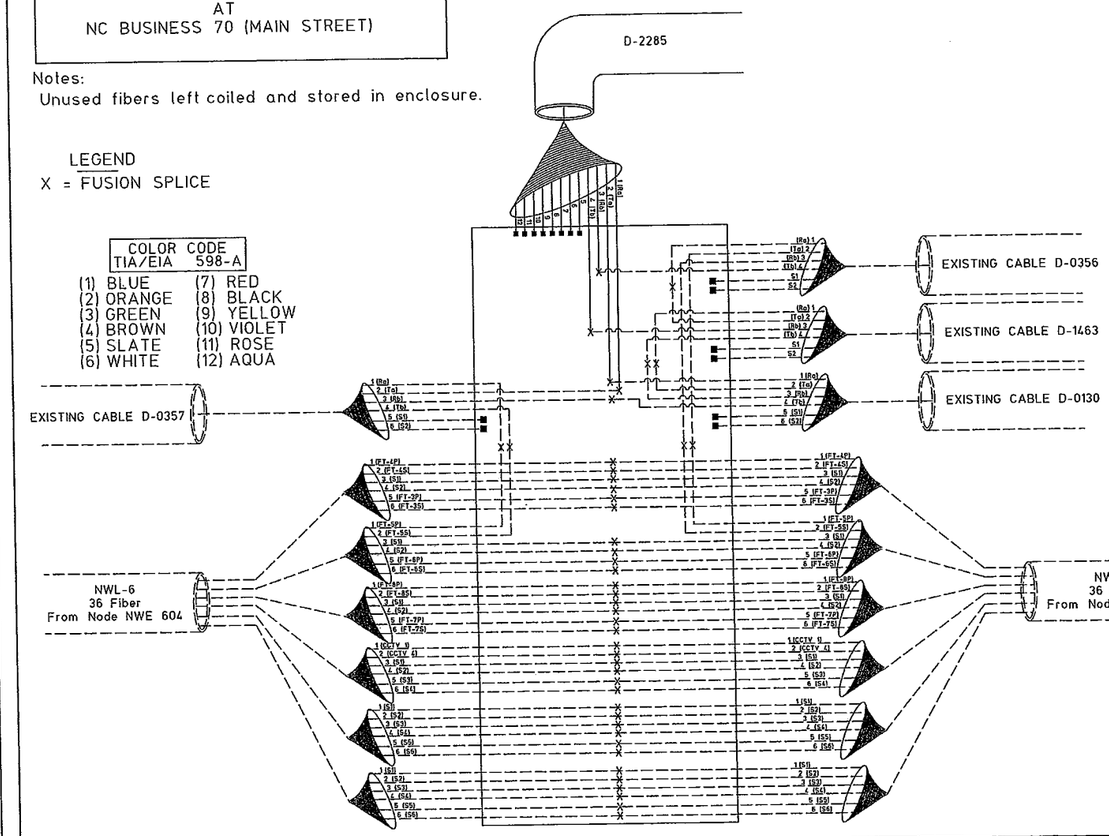

NC DEPARTMENT OF TRANSPORTATION
DIVISION OF HIGHWAYS
FINAL DRAWING Date: 5/6/10
Traffic Engineering Branch

NOTES

1. CONTRACTOR SHALL INSTALL A TRANSCEIVER THAT IS COMPATABLE WITH THE EXISTING SIGNAL SYSTEM.
2. CONTRACTOR IS RESPONSIBLE FOR ASSURING COMMUNICATIONS TO DURHAM TRAFFIC OPERATIONS CENTER ARE STABLE. IN THE EVENT COMMUNICATIONS CANNOT BE ESTABLISHED ACCORDING TO SPLICING DETAILS THE CONTRACTOR SHALL MODIFY SPLICING AND PLANS AS DIRECTED BY THE CITY TRAFFIC ENGINEER AND PROVIDE AND/ALL AS BUILT DRAWINGS.

DURHAM
1869
CITY OF DURHAM
101 City Hall Plaza
Durham, NC 27701
(919) 560-4366

Prepared for:
Traffic Engineering and Signal System Branch
STATE OF NORTH CAROLINA
DEPARTMENT OF TRANSPORTATION
Traffic Management Systems
750 Greenfield Parkway,
Garner, NC 27529

SCALE
NONE

Splice Detail

Division 05 Durham County Durham

PLAN DATE:	FEB 2009	REVIEWED BY:	AWE
PREPARED BY:	PJN	PROJ.NO.:	

REVISIONS	BOT.	DATE

SEAL
NORTH CAROLINA PROFESSIONAL SEAL 032040 ENGINEER PETER JOSEPH NICHOLAS III
SIGNATURE
DATE 01-09-10

&FILE&
&DATE&

PROJECT REFERENCE NO.	SHEET NO.
	ITS-5

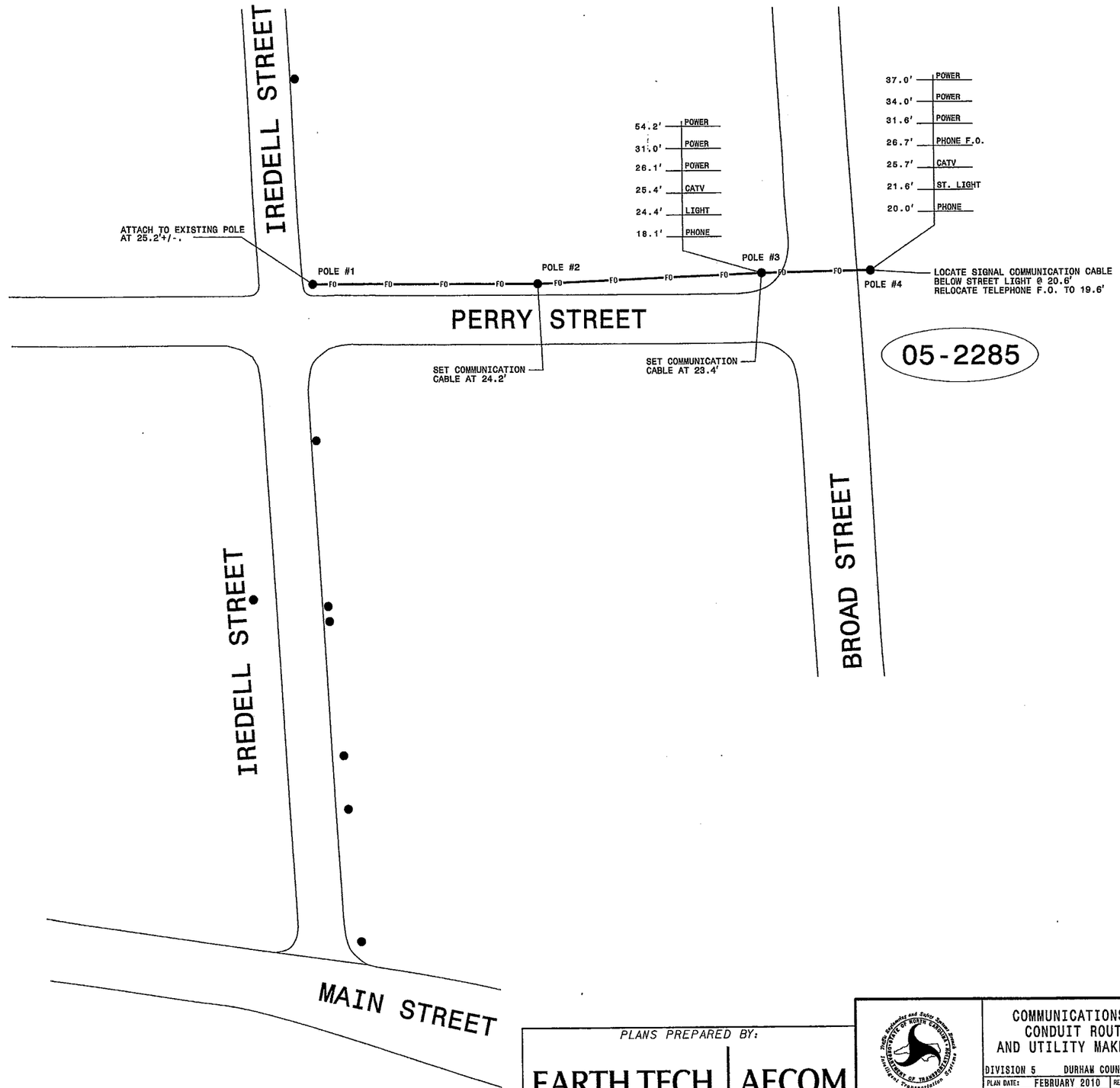

NC DEPARTMENT OF TRANSPORTATION
DIVISION OF HIGHWAYS
FINAL DRAWING Date: 5/6/10
Traffic Engineering Branch

PLANS PREPARED BY:

EARTH TECH | AECOM

F-0342
701 CORPORATE CENTER DRIVE SUITE 475
RALEIGH, NC 27607 P 919.854.6200 F 919.854.6259

750 N. Greenfield Pkwy., Garner, NC 27529

SCALE 0 NTS

COMMUNICATIONS CABLE AND CONDUIT ROUTING PLANS AND UTILITY MAKE READY PLANS

DIVISION 5	DURHAM COUNTY		DURHAM, NC
PLAN DATE:	FEBRUARY 2010	REVIEWED BY:	N DEAN
PREPARED BY:	S COX	REVIEWED BY:	S NANDAGIRI

REVISIONS	INIT.	DATE

SEAL

NORTH CAROLINA PROFESSIONAL SEAL 032123 ENGINEER SREEKANTH NANDAGIRI

SIGNATURE Sreekanth Nandagiri DATE 2/22/10

CADD FILE NAME

PROJECT REFERENCE NO.	SHEET NO.
	SIG-2

PHASING DIAGRAM

PHASING DIAGRAM
DETECTION LEGEND

- DETECTED MOVEMENT
- UNDETECTED MOVEMENT (OVERLAP)
- UNSIGNALIZED MOVEMENT
- PEDESTRIAN MOVEMENT

TABLE OF OPERATION

SIGNAL FACE	PHASE Ø 2+6	PHASE Ø 4+8	FLASH
21,22	G	R	Y
41,42	R	G	R
61,62	G	R	Y
81,82	R	G	R
P21,P22	W	DW	DRK
P41,P42	DW	W	DRK
P61,P62	W	DW	DRK
P81,P82	DW	W	DRK

TYPE 170 CONTROLLER LOOP & DETECTOR CHART

INDUCTIVE LOOPS						DETECTOR PROGRAMMING											
							TIMING		ATTRIBUTES							STATUS	
									1	2	3	4	5	6	7	8	
LOOP NO.	SIZE	TURNS	DIST. FROM STOPBAR	NEW	EXISTING	NEMA PHASE	DELAY	CARRY OVER (STRETCH)	FULL TIME DELAY	PROGRESSIVE CALL	RESERVED	COUNT	EXTENSION	TYPE 3	CHANGE	ALTERNATE	NEW	EXISTING
2A	6X6	4	70		X	Ø2	- SEC.	- SEC.					X		X			X
2B	6X40	2-4-2	+5		X	Ø2	- SEC.	- SEC.					X		X			X
4A	6X40	2-4-2	+5		X	Ø4	3 SEC.	- SEC.					X		X			X
4B	6X40	2-4-2	+5		X	Ø4	10 SEC.	- SEC.					X		X			X
6A	6X6	4	70		X	Ø6	- SEC.	- SEC.					X		X			X
6B	6X40	2-4-2	+5		X	Ø6	- SEC.	- SEC.					X		X			X
8A	6X40	2-4-2	+5		X	Ø8	3 SEC.	- SEC.					X		X			X
8B	6X40	2-4-2	+5		X	Ø8	10 SEC.	- SEC.					X		X			X
PEDESTRIAN PUSHBUTTONS																		
P21, P22				X		Ø2	- SEC.	- SEC.		X							X	
P41, P42				X		Ø4	- SEC.	- SEC.		X							X	
P61, P62				X		Ø6	- SEC.	- SEC.		X							X	
P81, P82				X		Ø8	- SEC.	- SEC.		X							X	

2-PHASE FULLY ACTUATED (DURHAM SIGNAL SYSTEM)

NOTES

1. Refer to "Roadway Standard Drawings NCDOT" dated January 2006, "Standard Specifications for Roads and Structures" dated January 2006, and all applicable sections of the latest version of the generic Project Special Provisions. The PSP can be accessed at the following website: http://www.ncdot.org/doh/preconstruct/traffic/itss
2. Do not program signal for late night flashing operation unless otherwise directed by the Engineer.
3. Set all detector units to presence mode.
4. Program all timing information into phase banks 1, 2, and 3 unless otherwise noted.
5. Set phase bank 3 maximum limit to 250 seconds for phases used.
6. Maximum times shown in timing chart are for free-run operation only. Coordinated signal system timing values supersede these values.
7. Program Pedestrian Heads to Countdown the Flashing "DON'T WALK" Time Only.
8. Omit "WALK" And Flashing "DON'T WALK" With No Pedestrian Calls.
9. Constructor shall provide all necessary soil boring information for foundation designs.
10. Contractor shall locate all existing utilities prior to commencing work. Work to be done so as to avoid conflicts with all utilities.
11. Install backplates for all signal heads.
12. All pavement markings are existing.

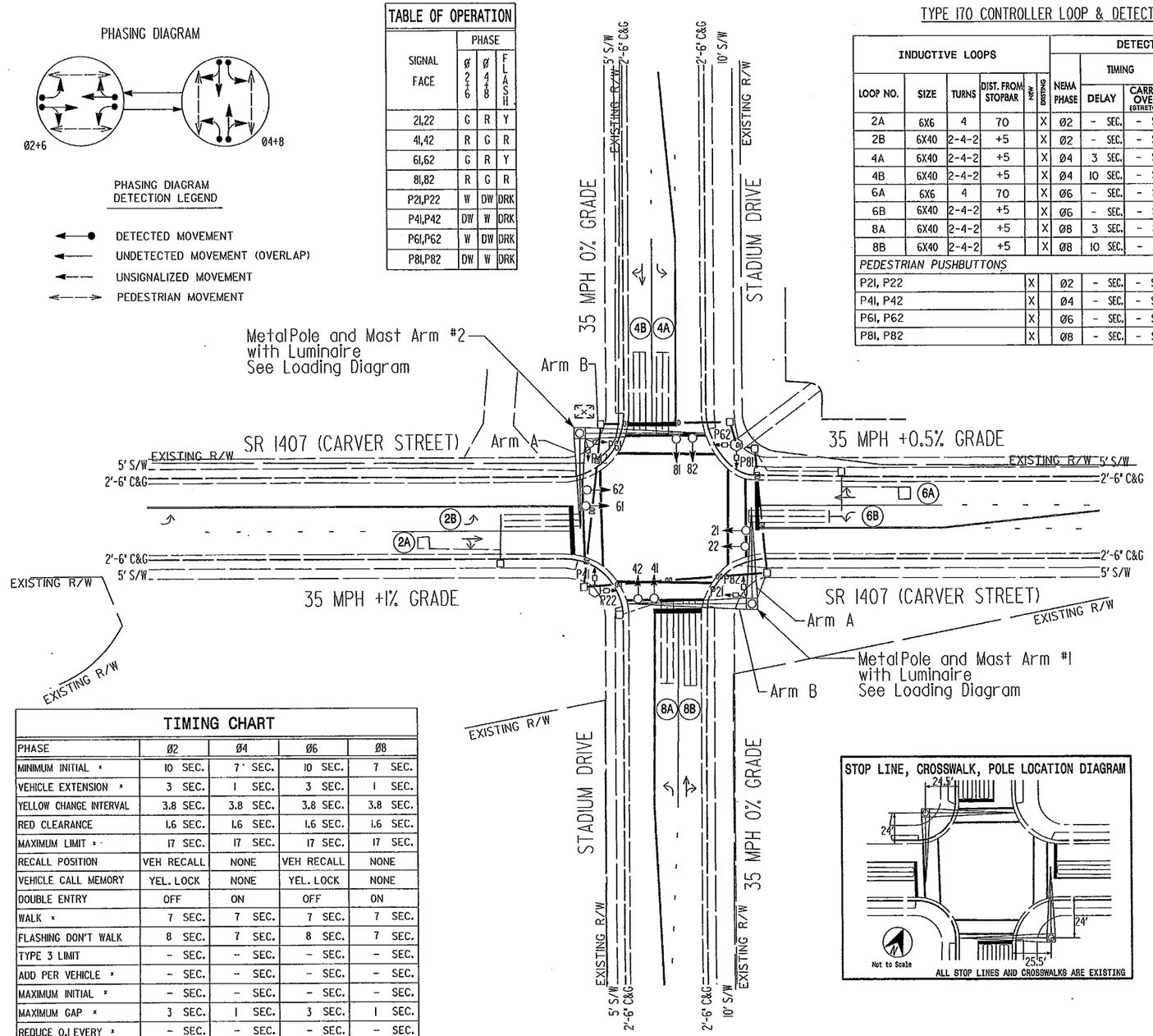

SIGNAL FACE I.D.

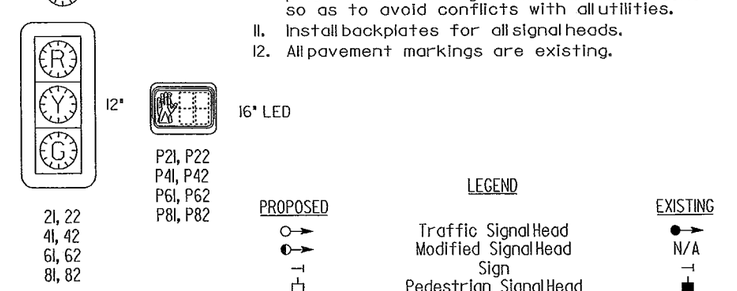

TIMING CHART

PHASE	Ø2	Ø4	Ø6	Ø8
MINIMUM INITIAL *	10 SEC.	7 SEC.	10 SEC.	7 SEC.
VEHICLE EXTENSION *	3 SEC.	1 SEC.	3 SEC.	1 SEC.
YELLOW CHANGE INTERVAL	3.8 SEC.	3.8 SEC.	3.8 SEC.	3.8 SEC.
RED CLEARANCE	1.6 SEC.	1.6 SEC.	1.6 SEC.	1.6 SEC.
MAXIMUM LIMIT *	17 SEC.	17 SEC.	17 SEC.	17 SEC.
RECALL POSITION	VEH RECALL	NONE	VEH RECALL	NONE
VEHICLE CALL MEMORY	YEL. LOCK	NONE	YEL. LOCK	NONE
DOUBLE ENTRY	OFF	ON	OFF	ON
WALK *	7 SEC.	7 SEC.	7 SEC.	7 SEC.
FLASHING DON'T WALK	8 SEC.	7 SEC.	8 SEC.	7 SEC.
TYPE 3 LIMIT	- SEC.	- SEC.	- SEC.	- SEC.
ADD PER VEHICLE *	- SEC.	- SEC.	- SEC.	- SEC.
MAXIMUM INITIAL *	- SEC.	- SEC.	- SEC.	- SEC.
MAXIMUM GAP *	3 SEC.	1 SEC.	3 SEC.	1 SEC.
REDUCE 0.1 EVERY *	- SEC.	- SEC.	- SEC.	- SEC.
MINIMUM GAP	3 SEC.	1 SEC.	3 SEC.	1 SEC.

* THESE VALUES MAY BE FIELD ADJUSTED. DO NOT ADJUST MIN GREEN AND EXTENSION TIMES FOR PHASE 2+6 LOWER THAN WHAT IS SHOWN. MIN GREEN FOR OTHER PHASE SHOULD NOT BE LOWER THAN 4 SECONDS.

STOP LINE, CROSSWALK, POLE LOCATION DIAGRAM

NC DEPARTMENT OF TRANSPORTATION
DIVISION OF HIGHWAYS
FINAL DRAWING Date: 4/14/10
Traffic Engineering Branch

LEGEND

PROPOSED		EXISTING
	Traffic Signal Head	
	Modified Signal Head	N/A
	Sign	
	Pedestrian Signal Head With Push Button & Sign	
	Signal Pole with Guy	
	Signal Pole with Sidewalk Guy	
	Inductive Loop Detector	
	Controller & Cabinet	
N/A	Junction Box	
	Underground Fiber Optic Cable	
N/A	2-in Underground Conduit	
	Right of Way	
	Directional Arrow	
	Stop Bar	
	Pedestrian Pedestal	
	Metal Pole w/Mast Arm	
DD	Directional Drill	N/A

SIGNAL UPGRADE

PLANS PREPARED BY:

EARTH TECH | AECOM

F-0342
701 CORPORATE CENTER DRIVE SUITE 475
RALEIGH, NC 27607 P 919.854.6200 F 919.854.6259

SCALE 0 30 1"=30'

SR 1407 (CARVER STREET)
AT
STADIUM DRIVE

DIVISION 5	DURHAM CO.	DURHAM
PLAN DATE: MARCH 2010	REVIEWED BY: S NANDAGIRI	
PREPARED BY: S COX	REVIEWED BY: N DEAN	

REVISIONS	INIT.	DATE

SEAL

NORTH CAROLINA PROFESSIONAL SEAL 032123 ENGINEER SREEKANTH NANDAGIRI

SIGNATURE Sreekanth Nandagiri DATE 3/24/10

SIG INVENTORY NO. 05-2291

PROJECT REFERENCE NO.	SHEET NO.
	S16. 3

EDI MODEL 2010ECL CONFLICT MONITOR PROGRAMMING DETAIL

(remove jumpers and set switches as shown)

WD ENABLE

SW2 — OFF / ON

REMOVE DIODE JUMPERS 2-6, 2-13, 2-15, 4-8, 4-14, 4-16, 6-13, 6-15, 8-14, 8-16, 13-15 AND 14-16

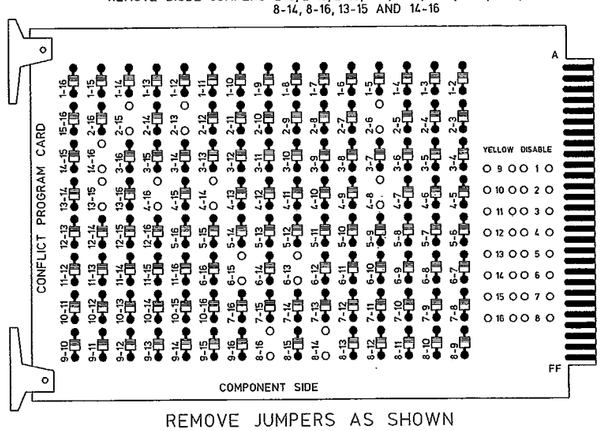

REMOVE JUMPERS AS SHOWN

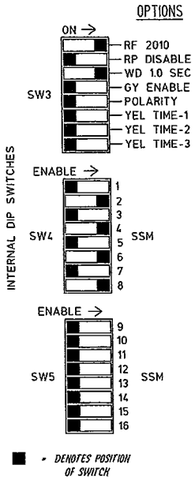

NOTES:

1. Card is provided with all diode jumpers in place. Removal of any jumper allows its channels to run concurrently.
2. Make sure jumpers SEL2-SEL5 are present on the monitor board.

INPUT FILE POSITION LAYOUT

(front view)

		1	2	3	4	5	6	7	8	9	10	11	12	13	14
FILE "I"	U	SLOT	Ø2	SLOT	SLOT	SLOT	Ø4	SLOT	SLOT	SLOT	SLOT	Advance	Ø2 PED	Ø6 PED	FS
		EMPTY	2A	EMPTY	EMPTY	EMPTY	4A	EMPTY	EMPTY	EMPTY	EMPTY	DC ISOLATOR	DC ISOLATOR	DC ISOLATOR	DC ISOLATOR
	L		Ø2				Ø4					Advance Enable	Ø4 PED	Ø8 PED	ST
			2B				4B					DC ISOLATOR	DC ISOLATOR	DC ISOLATOR	DC ISOLATOR
FILE "J"	U	SLOT	Ø6	SLOT	SLOT	SLOT	Ø8	SLOT	SLOT	SLOT	SLOT	NOT USED	SLOT	SLOT	SLOT
		EMPTY	6A	EMPTY	EMPTY	EMPTY	8A	EMPTY	EMPTY	EMPTY	EMPTY		EMPTY	EMPTY	EMPTY
	L		Ø6				Ø8					Door Ajar			
			6B				8B					DC ISOLATOR			

EX.: 1A, 2A, ETC. = LOOP NO.'S

FS = FLASH SENSE
ST = STOP TIME

NOTES

1. To prevent "flash-conflict" problems, insert red flash program blocks for all unused vehicle load switches in the output file. The installer shall verify that signal heads flash in accordance with the Signal Plans.
2. Ensure that red enable is active at all times during normal operation. To prevent red failures on unused monitor channels, tie unused red monitor inputs 1, 3, 5, 7, 9, 10, 11, 12, 13, 14, 15 and 16 to load switch AC+ per the cabinet manufacturer's instructions.
3. Program controller to start up in phases 2 and 6 green.
4. Set power-up flash time to 7 seconds and implement within the controller programming.
5. Enable simultaneous gap-out feature, on the controller unit, for all phases.
6. This controller and cabinet are to be programmed and wired to be a part of the Durham Computerized Signal System. The Contractor is responsible for the proper interconnection of this signal within the system.
7. Ensure start up flash phases are coordinated with flash program block assignments.
8. Program phases 4 and 8, on the controller unit, for Double Entry.

EQUIPMENT INFORMATION

CONTROLLER.....McCAIN TRAFFIC TYPE 170E
CABINET .....McCAIN TRAFFIC MODEL 332
SOFTWARE .....BI TRANS 233NC2 ×
CABINET MOUNT.....BASE
OUTPUT FILE POSITIONS.....12
LOAD SWITCHES USED.....S2,S2P,S4,S4P,S6,S6P,S8,S8P
PHASES USED.....2,2PED,4,4PED,6,6PED,8,8PED
OVERLAPS.....NONE

× SOFTWARE TO BE PROVIDED BY CITY OF DURHAM

INPUT FILE CONNECTION & PROGRAMMING CHART

LOOP NO.	LOOP TERMINAL	INPUT FILE POS.	DETECTOR NO.	PIN NO.	ATTRIBUTES	NEMA PHASE
2A	TB2-5,6	I2U	1	39	5, 7	2
2B	TB2-7,8	I2L	2	43	5, 7	2
4A	TB4-9,10	I6U	3	41	5, 7	4
4B	TB4-11,12	I6L	4	45	5, 7	4
6A	TB3-5,6	J2U	5	40	5, 7	6
6B	TB3-7,8	J2L	6	44	5, 7	6
8A	TB5-9,10	J6U	7	42	5, 7	8
8B	TB5-11,12	J6L	8	46	5, 7	8
PEDESTRIAN DETECTION						
P21,P22	TB8-4,6	I12U	9	67	2	2
P41,P42	TB8-5,6	I12L	10	69	2	4
P61,P62	TB8-7,9	I13U	11	68	2	6
P81,P82	TB8-8,9	I13L	12	70	2	8

NOTE: Program detector delay and carryover times as specified on signal design plans.

INPUT FILE POSITION LEGEND: J2L
FILE J
SLOT 2
LOWER

DETECTOR ATTRIBUTES LEGEND:

1-FULL TIME DELAY
2-PED CALL
3-RESERVED
4-COUNTING
5-EXTENSION
6-TYPE 3
7-CALLING
8-ALTERNATE

DURHAM 1869 CITY OF MEDICINE

City of Durham
101 City Hall Plaza
Durham, NC 27701

SIGNAL HEAD HOOK-UP CHART

LOAD SWITCH NO.	S1	S2	S2P	S3	S4	S4P	S5	S6	S6P	S7	S8	S8P
PHASE	1	2	2 PED	3	4	4 PED	5	6	6 PED	7	8	8 PED
SIGNAL HEAD NO.	NU	21,22	P21, P22	NU	41,42	P41, P42	NU	61,62	P61, P62	NU	81,82	P81, P82
RED		128			101			134			107	
YELLOW		129			102			135			108	
GREEN		130			103			136			109	
RED ARROW												
YELLOW ARROW												
GREEN ARROW												
✋			113			104			119			110
🚶			115			106			121			112

NU = Not Used

COUNTDOWN PEDESTRIAN SIGNAL OPERATION

Countdown Ped Signals are required to display timing only during Ped Clearance Interval. Consult Ped Signal Module user's manual for instructions on selecting this feature.

PEDESTRIAN PHASE PROGRAMMING

PROGRAM PEDESTRIAN OUTPUTS 2P,4P,6P AND 8P
AT KEYPAD INPUT E/125+F+5=Ø2,
AT KEYPAD INPUT E/125+F+6=Ø6,
AT KEYPAD INPUT E/125+F+7=Ø4,
AT KEYPAD INPUT E/125+F+8=Ø8.

THIS ELECTRICAL DETAIL IS FOR
THE SIGNAL DESIGN: 05-2291
DESIGNED: March 2010
SEALED: March 24, 2010
REVISED:

SIGNAL SYSTEM DATA:	
Drop	12
Area	3
Area Address	42
Comm Channel	FT-2

NC DEPARTMENT OF TRANSPORTATION
DIVISION OF HIGHWAYS
FINAL DRAWING Date: 4/14/10
R.S.M.
Traffic Engineering Branch

SIGNAL UPGRADE

STATE OF NORTH CAROLINA DEPARTMENT OF TRANSPORTATION — Traffic Engineering and Safety Systems Branch — Signals and Geometrics Section
750 Greenfield Pkwy, Garner, NC 27529

SR 1407 (CARVER STREET)
AT
STADIUM DRIVE

DIVISION 5 DURHAM COUNTY DURHAM

PLAN DATE:	MARCH 2010	REVIEWED BY:	P. LOZIUK
PREPARED BY:	L. TRACEY	REVIEWED BY:	P. NICHOLAS

REVISIONS	BOT.	DATE

SEAL

NORTH CAROLINA PROFESSIONAL SEAL 032040 ENGINEER JOSEPH NICHOLAS

SIGNATURE 3-24-10 DATE

SIG. INVENTORY NO. 05-2291

Design Loading for METAL POLE NO. 1, MAST ARM A

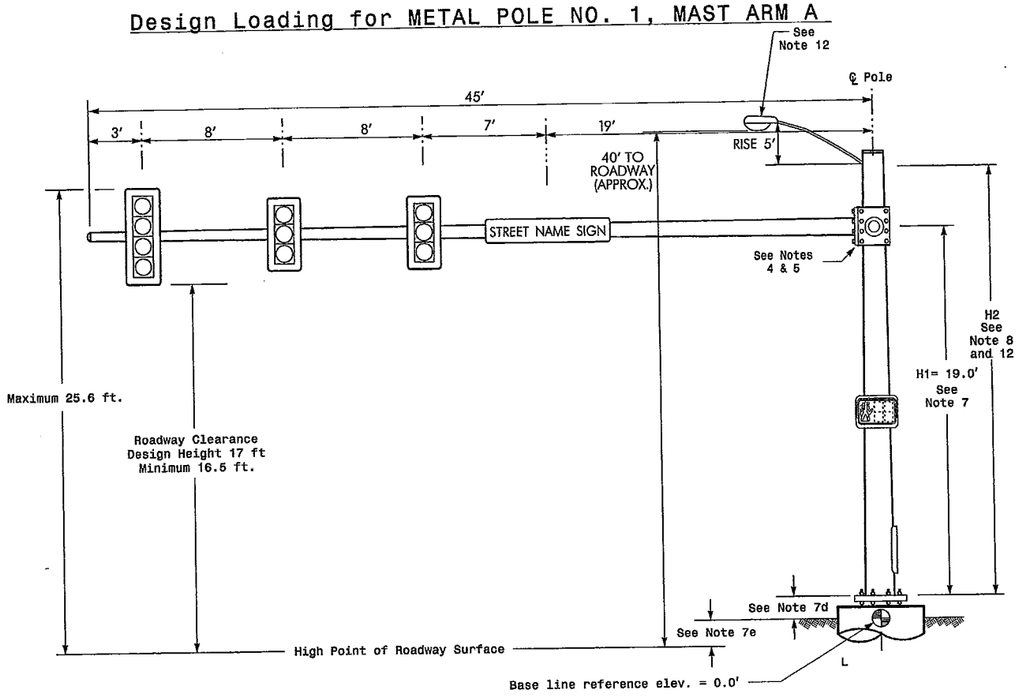

Elevation View @ 270°

Design Loading for METAL POLE NO. 1, MAST ARM B

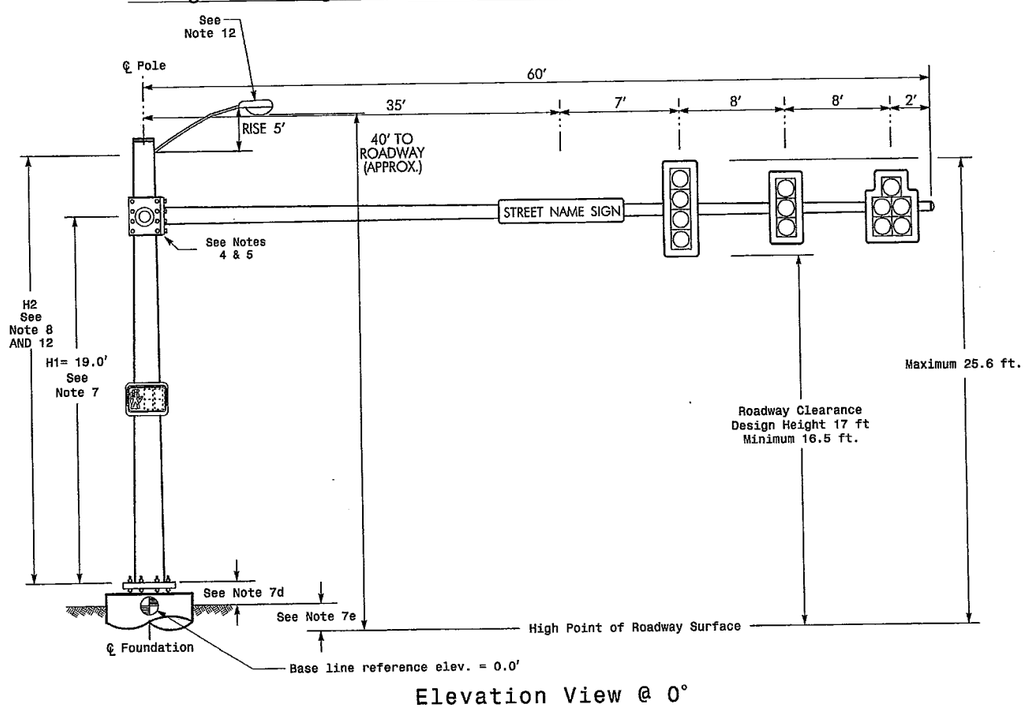

Elevation View @ 0°

SPECIAL NOTE

The contractor is responsible for verifying that the mast arm attachment height (H1) will provide the "Design Height" clearance from the roadway before submitting final shop drawings for approval. Verify elevation data below which was obtained by field measurement or from available project survey data.

Elevation Data for Mast Arm Attachment (H1)

Elevation Differences for:	Arm "A"	Arm "B"
Baseline reference point at ℄ Foundation @ ground level	0.0'	0.0'
Elevation difference at High point of roadway surface	-0.1 ft.	-0.7' ft.
Elevation difference at Edge of travelway or face of curb	-0.4 ft.	-0.7 ft.

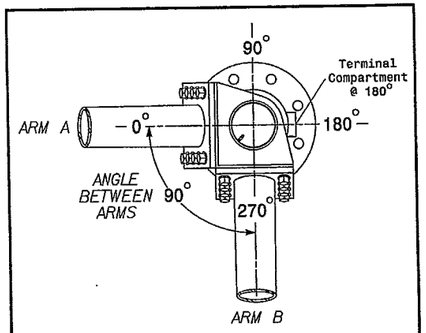

POLE RADIAL ORIENTATION

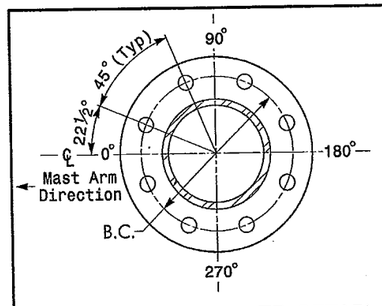

8 BOLT BASE PLATE DETAIL

See Note 6

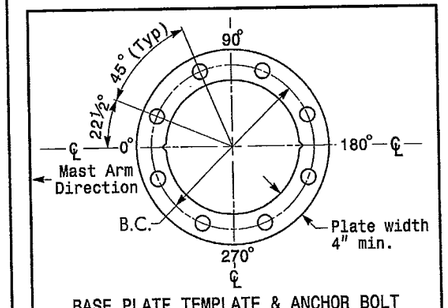

BASE PLATE TEMPLATE & ANCHOR BOLT LOCK PLATE DETAIL

For 8 Bolt Base Plate

MAST ARM LOADING SCHEDULE

LOADING SYMBOL	DESCRIPTION	AREA	SIZE	WEIGHT
	SIGNAL HEAD 12"-3 SECTION-WITH BACKPLATE AND ASTRO-BRAC	9.3 S.F.	25.5" W X 52.5" L	60 LBS
	SIGNAL HEAD 12"-4 SECTION (VERTICAL)-WITH BACKPLATE AND ASTRO-BRAC	11.5 S.F.	25.5" W X 66.0" L	74 LBS
	SIGNAL HEAD 12"-5 SECTION-WITH BACKPLATE AND ASTRO-BRAC	16.3 S.F.	42.0" W X 56.0" L	103 LBS
STREET NAME SIGN	STREET NAME SIGN RIGID MOUNTED WITH ASTRO-SIGN-BRAC	12.0 S.F.	18.0" W X 96.0" L	27 LBS
	LUMINAIRE (Power Door Cobrahead) AEL ROADWAY SERIES 325	6.4 S.F.	22.0" W X 42.0" L	43 LBS
	PEDESTRIAN SIGNAL HEAD WITH MOUNTING HARDWARE	2.2 S.F.	18.5" W X 17.0" L	21 LBS

NOTES

Design Reference Material

1. Design the traffic signal structure and foundation in accordance with:
   - The 4th Edition 2001 AASHTO "Standard Specifications for Structural Supports for Highway Signs, Luminaires, and Traffic Signals, including all of the latest interim revisions.
   - The 2006 NCDOT "Standard Specifications for Roads and Structures". The latest addenda to these specifications can be found in the traffic signal project special provisions.
   - The 2006 NCDOT Roadway Standard Drawings.
   - The traffic signal project plans and special provisions.
   - The NCDOT "Metal Pole Standards" located at the following NCDOT website: http:/www.ncdot.org/doh/preconstruct/traffic/ss/ws/mpoles/poles.html

Design Requirements

2. Design the traffic signal structure using the loading conditions shown in the elevation views. These are anticipated worst case "Design loads" and may not represent the actual loads that will be applied at the time of the installation. The contractor should refer to the traffic signal plans for the actual loads that will be applied at the time of the installation.
3. Maximum allowable CSR for all signal supports is 0.9.
4. The camber design for mast arm deflection should provide an appearance of a low pitched arch where the tip or the free end of the mast arm does not deflect below horizontal when fully loaded.
5. A clamp-type bolted mast arm-to-pole connection may be used instead of the welded ring stiffened box connection shown as long as the connection meets all of the design requirements. This is a high strength connection. Use Direct Tension Indicators (ASTM F959) for each bolt.
6. Design base plate with 8 anchor bolt holes. Provide 2 inch x 60 inch anchor bolts.
7. The mast arm attachment height (H1) shown is based on the following design assumptions:
   a. Mast arm slope and deflection are not considered in determining the arm attachment height as they are assumed to offset each other.
   b. Signal heads attached to the mast arm are rigid mounted and vertically centered on the arm.
   c. The roadway clearance height for design is as shown in the elevation views.
   d. The top of the pole base plate is .75 feet above the ground elevation.
   e. Refer to the Elevation Data chart for elevation differences between the proposed foundation ground level and the high point on the roadway.
8. The pole manufacturer will determine the total height (H2) of each pole based on the luminaire height requirement of 40 feet over the roadway.
9. If pole location adjustments are required, the contractor must gain approval from the engineer as this may affect the mast arm lengths and arm attachment heights. The contractor may contact the Signals Structural Engineer for assistance at (919) 773-2800.
10. The contractor is responsible for verifying that the mast arm length shown will allow proper positioning of the signal heads over the roadway.
11. The contractor is responsible for providing soil penetration testing data (SPT) to the pole manufacturer so site specific foundations can be designed.
12. The Contractor shall verify luminaire mounting height before preparing shop drawings.

NC DEPARTMENT OF TRANSPORTATION
DIVISION OF HIGHWAYS
FINAL DRAWING Date: 4/14/10
R. Sim
Traffic Engineering Branch

PLANS PREPARED BY:

EARTH TECH | AECOM

F-0342

701 CORPORATE CENTER DRIVE SUITE 475
RALEIGH, NC 27607 P 919.854.6200 F 919.854.6259

NCDOT Wind Zone 4 (90 mph)

Transportation Mobility and Safety Division
STATE OF NORTH CAROLINA DEPARTMENT OF TRANSPORTATION
ITS and Signals Unit
759 N. Greenfield Pkwy, Garner, NC 27529

SCALE 0 N/A N/A

SR 1407 (CARVER STREET)
AT
STADIUM DRIVE

DIVISION 5	DURHAM CO.	DURHAM
PLAN DATE: MARCH 2010	REVIEWED BY:	N J DEAN
PREPARED BY: S COX	REVIEWED BY:	S NANDAGIRI

REVISIONS	INIT.	DATE

SEAL

NORTH CAROLINA PROFESSIONAL SEAL 032123 ENGINEER SREELAKSHMI NANDAGIRI

Sreelakshmi Nandagiri 3/24/10
SIGNATURE DATE

SIG. INVENTORY NO. 05-2291

8:33:24 AM
01:MYD4582\Woods\Stadium-Carver_Sig_psh_D4.dgn
cox01

Design Loading for METAL POLE NO. 2, MAST ARM A

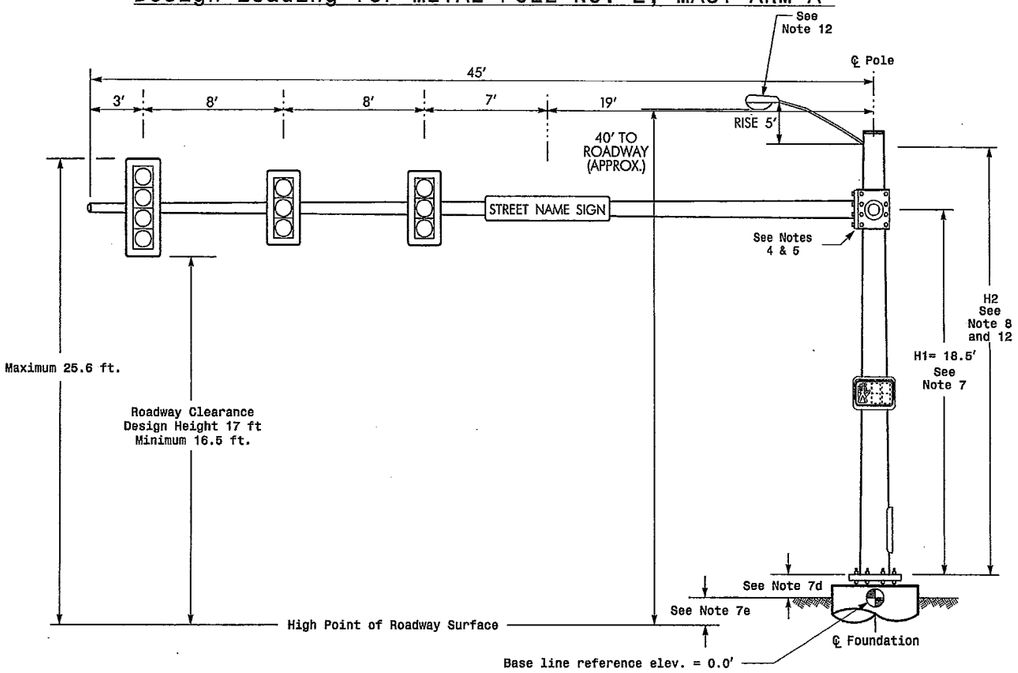

Elevation View @ 0°

Design Loading for METAL POLE NO. 2, MAST ARM B

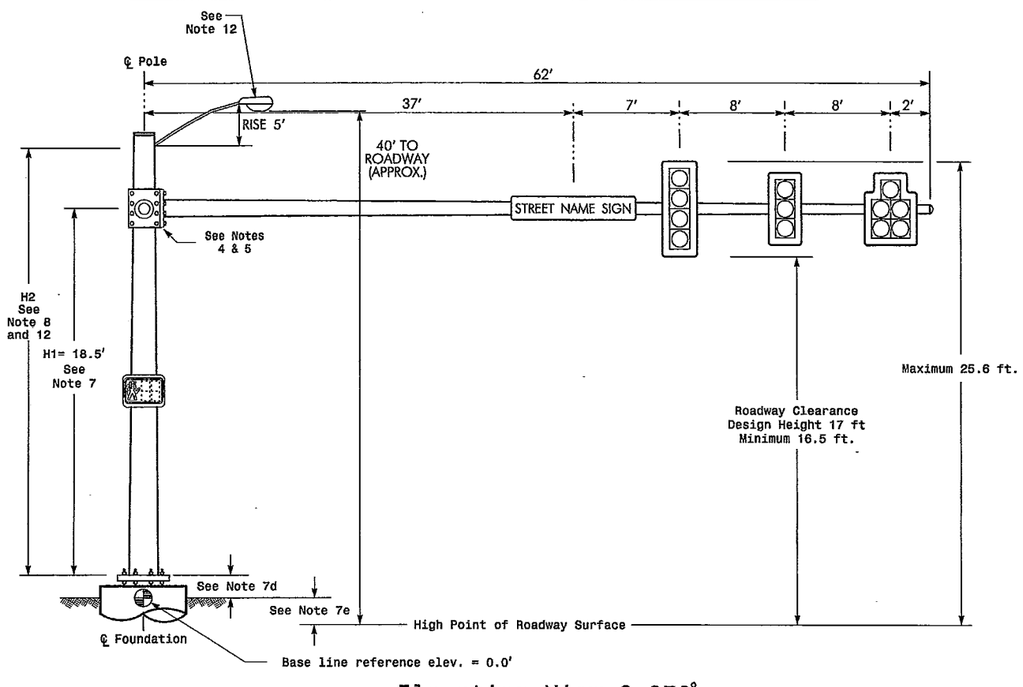

Elevation View @ 270°

SPECIAL NOTE

The contractor is responsible for verifying that the mast arm attachment height (H1) will provide the "Design Height" clearance from the roadway before submitting final shop drawings for approval. Verify elevation data below which was obtained by field measurement or from available project survey data.

Elevation Data for Mast Arm Attachment (H1)

Elevation Differences for:	Arm "A"	Arm "B"
Baseline reference point at ℄ Foundation @ ground level	0.0 ft.	0.0 ft.
Elevation difference at High point of roadway surface	-1.31 ft.	-0.6 ft.
Elevation difference at Edge of travelway or face of curb	-1.55 ft.	-0.9 ft

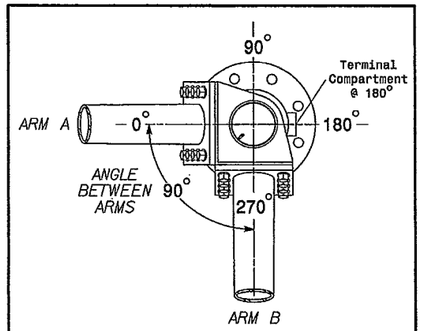

POLE RADIAL ORIENTATION

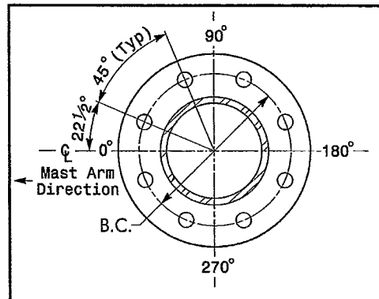

8 BOLT BASE PLATE DETAIL

See Note 6

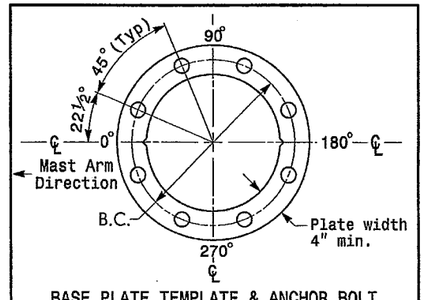

BASE PLATE TEMPLATE & ANCHOR BOLT LOCK PLATE DETAIL

For 8 Bolt Base Plate

MAST ARM LOADING SCHEDULE

LOADING SYMBOL	DESCRIPTION	AREA	SIZE	WEIGHT
	SIGNAL HEAD 12"-3 SECTION-WITH BACKPLATE AND ASTRO-BRAC	9.3 S.F.	25.5" W X 52.5" L	60 LBS
	SIGNAL HEAD 12"-4 SECTION (VERTICAL)-WITH BACKPLATE AND ASTRO-BRAC	11.5 S.F.	25.5" W X 66.0" L	74 LBS
	SIGNAL HEAD 12"-5 SECTION-WITH BACKPLATE AND ASTRO-BRAC	16.3 S.F.	42.0" W X 56.0" L	103 LBS
STREET NAME SIGN	STREET NAME SIGN RIGID MOUNTED WITH ASTRO-SIGN-BRAC	12.0 S.F.	18.0" W X 96.0" L	27 LBS
	LUMINAIRE (Power Door Cobrahead) AEL ROADWAY SERIES 325	6.4 S.F.	22.0" W X 42.0" L	43 LBS
	PEDESTRIAN SIGNAL HEAD WITH MOUNTING HARDWARE	2.2 S.F.	18.5" W X 17.0" L	21 LBS

NOTES

Design Reference Material

1. Design the traffic signal structure and foundation in accordance with:
   - The 4th Edition 2001 AASHTO "Standard Specifications for Structural Supports for Highway Signs, Luminaires, and Traffic Signals, including all of the latest interim revisions.
   - The 2006 NCDOT "Standard Specifications for Roads and Structures". The latest addenda to these specifications can be found in the traffic signal project special provisions.
   - The 2006 NCDOT Roadway Standard Drawings.
   - The traffic signal project plans and special provisions.
   - The NCDOT "Metal Pole Standards" located at the following NCDOT website: http://www.ncdot.org/doh/preconstruct/traffic/tss/ws/mpoles/poles.html

Design Requirements

2. Design the traffic signal structure using the loading conditions shown in the elevation views. These are anticipated worst case "Design loads" and may not represent the actual loads that will be applied at the time of the installation. The contractor should refer to the traffic signal plans for the actual loads that will be applied at the time of the installation.
3. Maximum allowable CSR for all signal supports is 0.9.
4. The camber design for mast arm deflection should provide an appearance of a low pitched arch where the tip or the free end of the mast arm does not deflect below horizontal when fully loaded.
5. A clamp-type bolted mast arm-to-pole connection may be used instead of the welded ring stiffened box connection shown as long as the connection meets all of the design requirements. This is a high strength connection. Use Direct Tension Indicators (ASTM F959) for each bolt.
6. Design base plate with 8 anchor bolt holes. Provide 2 inch x 60 inch anchor bolts.
7. The mast arm attachment height (H1) shown is based on the following design assumptions:
   a. Mast arm slope and deflection are not considered in determining the arm attachment height as they are assumed to offset each other.
   b. Signal heads attached to the mast arm are rigid mounted and vertically centered on the arm.
   c. The roadway clearance height for design is as shown in the elevation views.
   d. The top of the pole base plate is .75 feet above the ground elevation.
   e. Refer to the Elevation Data chart for elevation differences between the proposed foundation ground level and the high point on the roadway.
8. The pole manufacturer will determine the total height (H2) of each pole based on the luminaire height requirement of 40 feet over the roadway.
9. If pole location adjustments are required, the contractor must gain approval from the engineer as this may affect the mast arm lengths and arm attachment heights. The contractor may contact the Signals Structural Engineer for assistance at (919) 773-2800.
10. The contractor is responsible for verifying that the mast arm length shown will allow proper positioning of the signal heads over the roadway.
11. The contractor is responsible for providing soil penetration testing data (SPT) to the pole manufacturer so site specific foundations can be designed.
12. The Contractor shall verify luminaire mounting height before preparing shop drawings.

NC DEPARTMENT OF TRANSPORTATION
DIVISION OF HIGHWAYS
FINAL DRAWING Date: 4/14/10
R Pfh
Traffic Engineering Branch

PLANS PREPARED BY:

EARTH TECH | AECOM

F-0342

701 CORPORATE CENTER DRIVE SUITE 475
RALEIGH, NC 27607 P 919.854.6200 F 919.854.6259

NCDOT Wind Zone 4 (90 mph)

750 N. Greenfield Pkwy, Garner, NC 27529

SCALE: 0 N/A — N/A

SR 1407 (CARVER STREET) AT STADIUM DRIVE

DIVISION 5	DURHAM CO.	DURHAM
PLAN DATE: MARCH 2010	REVIEWED BY: S NANDAGIRI	
PREPARED BY: S COX	REVIEWED BY: N DEAN	

REVISIONS	INIT.	DATE

SEAL: NORTH CAROLINA PROFESSIONAL SEAL 032123 ENGINEER SREEKANTH NANDAGIRI

Sreekanth Nandagiri 3/24/10
SIGNATURE DATE

SIG. INVENTORY NO. 05-2291

8:33:44 AM
C:\Pw_Working\DOT\Woodside\tsd1um-Carver_Sig_psh_05.dgn
const

PROJECT REFERENCE NO.	SHEET NO.
	Sig. 6

LEGEND

- SINGLE ANTENNA
- DOUBLE ANTENNA FOR REPEATER OPERATION
- EXISTING WOOD POLE
- EXISTING METAL POLE
- EXISTING METAL POLE WITH MAST ARM
- SP SIGNAL POLE
- EXISTING CONTROLLER AND CABINET
- EXISTING AERIAL SPLICE ENCLOSURE
- XX-XXXX SIGNAL INVENTORY NUMBER

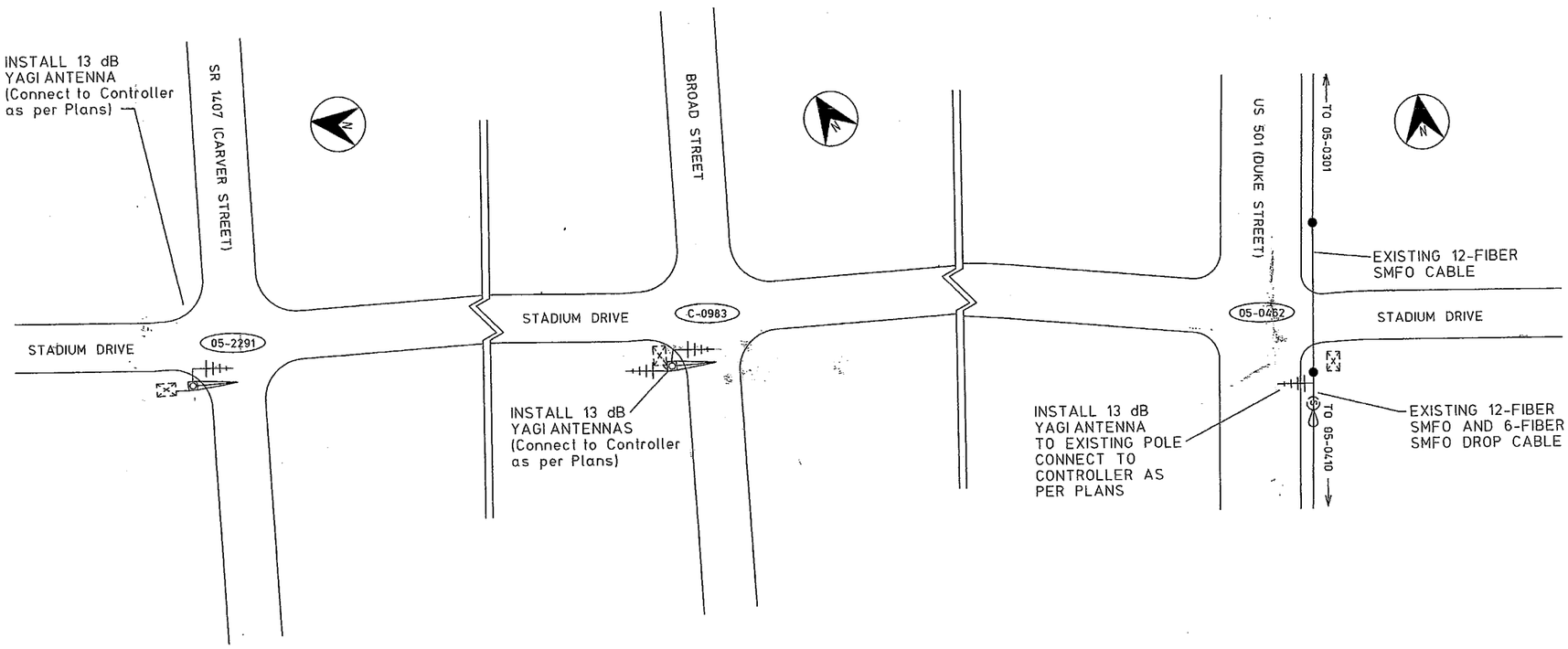

NOTES:

1. INSTALL COAXIAL CABLE
   A. ON WOOD POLES, INSTALL A 2" RISER WITH HEAT SHRINK TUBING TO ROUTE THE COAXIAL CABLE TO THE ANTENNA.
   B. ON METAL POLES, RUN COAXIAL CABLE UP THROUGH THE POLE AND OUT THE MAST ARM;
      FIELD DRILL HOLE WITH GROMMET THROUGH BOTTOM OF MAST ARM FOR INSTALLATION OF THE COAXIAL CABLE TO THE ANTENNA.
      USE METHODS APPROVED BY THE ENGINEER.
   C. ON METAL STRAIN POLES, RUN COAXIAL ANTENNA CABLE UP THROUGH THE POLE AND REPLACE THE WEATHERHEAD WITH
      HEAT SHRINK TUBING AND ROUTE THE COAXIAL CABLE TO THE ANTENNA.
   D. BETWEEN THE POINT OF EXITING THE METAL POLE OR MAST ARM AND THE ANTENNA, SECURE THE COAXIAL CABLE
      TO THE STRUCTURE USING 3/4" STAINLESS STEEL STRAPS EVERY 12".
2. IF EXISTING SPARE RISER IS AVAILABLE, REMOVE WEATHERHEAD AND INSTALL COAXIAL CABLES. RESEAL WITH HEAT SHRINK TUBING.
3. INSTALL WIRELESS ANTENNA ON POLE WITH RF WARNING SIGN AND AIM TOWARDS MASTER AS SHOWN ON DETAIL.
4. MAINTAIN PROPER CLEARANCE FROM ALL UTILITIES PER THE NATIONAL ELECTRICAL SAFTY CODE.
5. INSTALL WIRELESS SERIAL RADIO MODEM WITH EXTERNAL DISCONNECT SWITCH LOCATED ON CABINET.
6. REFERENCE "WIRELESS RADIO ANTENNA TYPICAL DETAILS."
7. INTEGRATE SIGNALS INTO THE DURHAM SIGNAL SYSTEM SOFTWARE GUI, MAPS, DATABASE AND COMMUNICATIONS SERVER.
   APPEND TO SAME CHANNEL AS INTERSECTION 05-0462.
8. LOCATION OF YAGI ANTENNAE TO BE FIELD LOCATED AND APPROVED BY ENGINEER.

NC DEPARTMENT OF TRANSPORTATION
DIVISION OF HIGHWAYS
FINAL DRAWING Date: 4/14/10
R 3/4
Traffic Engineering Branch

DURHAM 1869 CITY OF MEDICINE
City of Durham
101 City Hall Plaza
Durham, NC 27701

NC Department of Transportation
Traffic Management Systems
750 Greenfield Pkwy., Garner, NC 27529

SCALE 0

SR 1407 (CARVER STREET)
AT STADIUM DRIVE
INTERCONNECT
WIRELESS COMMUNICATION PLANS

DURHAM COUNTY DURHAM

PLAN DATE: OCTOBER 2009	REVIEWED BY:		
PREPARED BY: P NICHOLAS	REVIEWED BY: L TRACEY		
REVISIONS		DOT.	DATE

SEAL
NORTH CAROLINA PROFESSIONAL SEAL 032040 ENGINEER JOSEPH NICHOLAS
SIGNATURE 2-22-10 DATE
CADD Filename:

PROJECT REFERENCE NO.	SHEET NO.
	Sig. 7

EXISTING IN DURHAM CENTRAL SIGNAL SYSTEM

US 501 (DUKE STREET)
AT STADIUM DRIVE

SIG. INV. 05-0462

NOTES:
1. INSTALL NEW RADIO AND 2- 13 dB YAGI ANTENNA AT EXISTING CABINET FOR BROAD STREET AT STADIUM DRIVE. (SEE WIRELESS COMMUNICATION PLAN, SHEET SIG. 8)
2. INSTALL NEW RADIO AND 13 dB YAGI ANTENNA AT EXISTING CABINET FOR SR 1407 (CARVER STREET) AT STADIUM DRIVE (SEE WIRELESS COMMUNICATION PLAN, SHEET SIG. 8)
3. INSTALL ENCOM MODEL EP-SPLITTER CONNECT DUAL ANTENNAS PER MANUFACTURERS RECOMMENDATION.

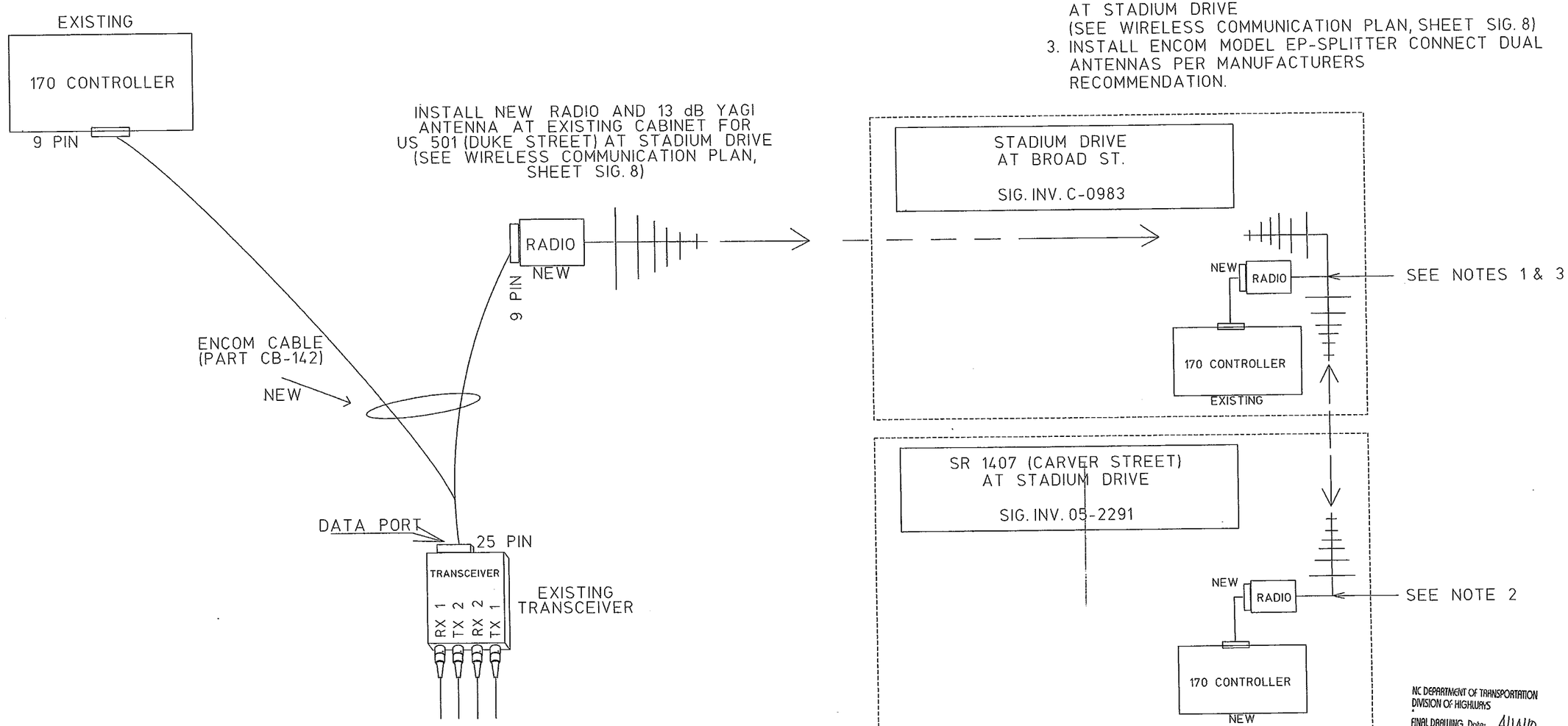

NC DEPARTMENT OF TRANSPORTATION
DIVISION OF HIGHWAYS
FINAL DRAWING Date: 4/14/10
Traffic Engineering Branch

DURHAM 1869 CITY OF MEDICINE

City of Durham
101 City Hall Plaza
Durham, NC 27701

750 Greenfield Pkwy., Garner, NC 27529

SCALE 0

SR 1407 (CARVER STREET)
AT STADIUM DRIVE
INTERCONNECT
WIRELESS COMMUNICATION PLANS

DURHAM COUNTY — DURHAM

PLAN DATE:	OCTOBER 2009	REVIEWED BY:	
PREPARED BY:	P NICHOLAS	REVIEWED BY:	L TRACEY

REVISIONS	RST.	DATE

SEAL
NORTH CAROLINA PROFESSIONAL SEAL 032040 ENGINEER PETER JOSEPH NICHOLAS IV

SIGNATURE — DATE 2-22-10

CADD Filename:

PROJECT REFERENCE NO.	SHEET NO.
	Sig. 8

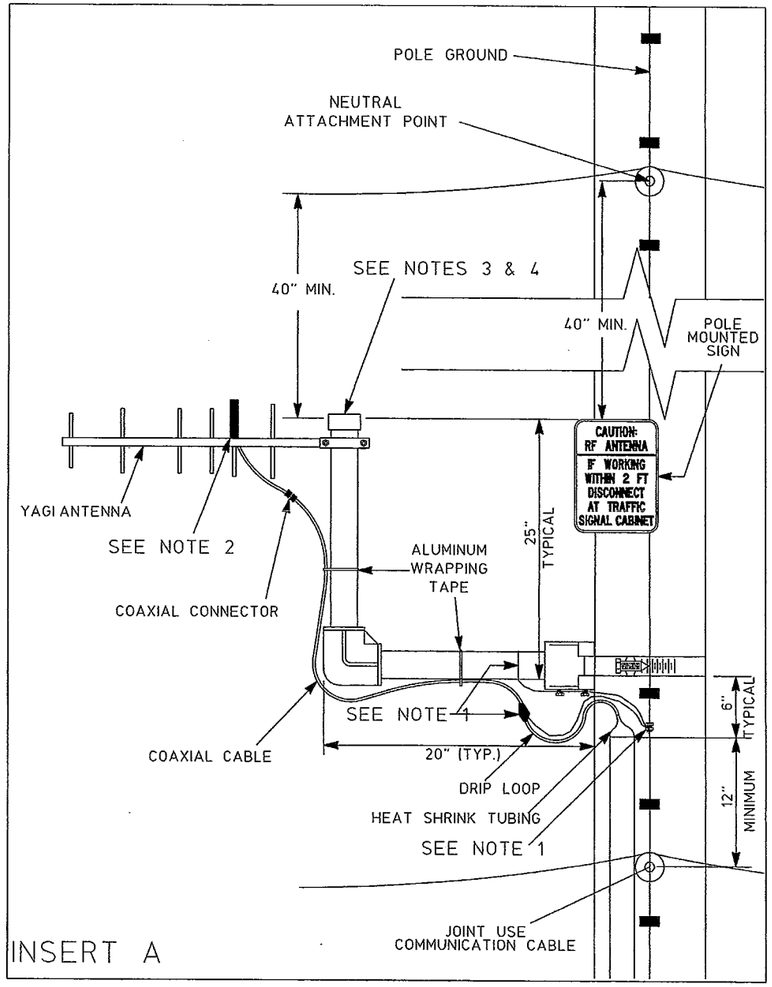

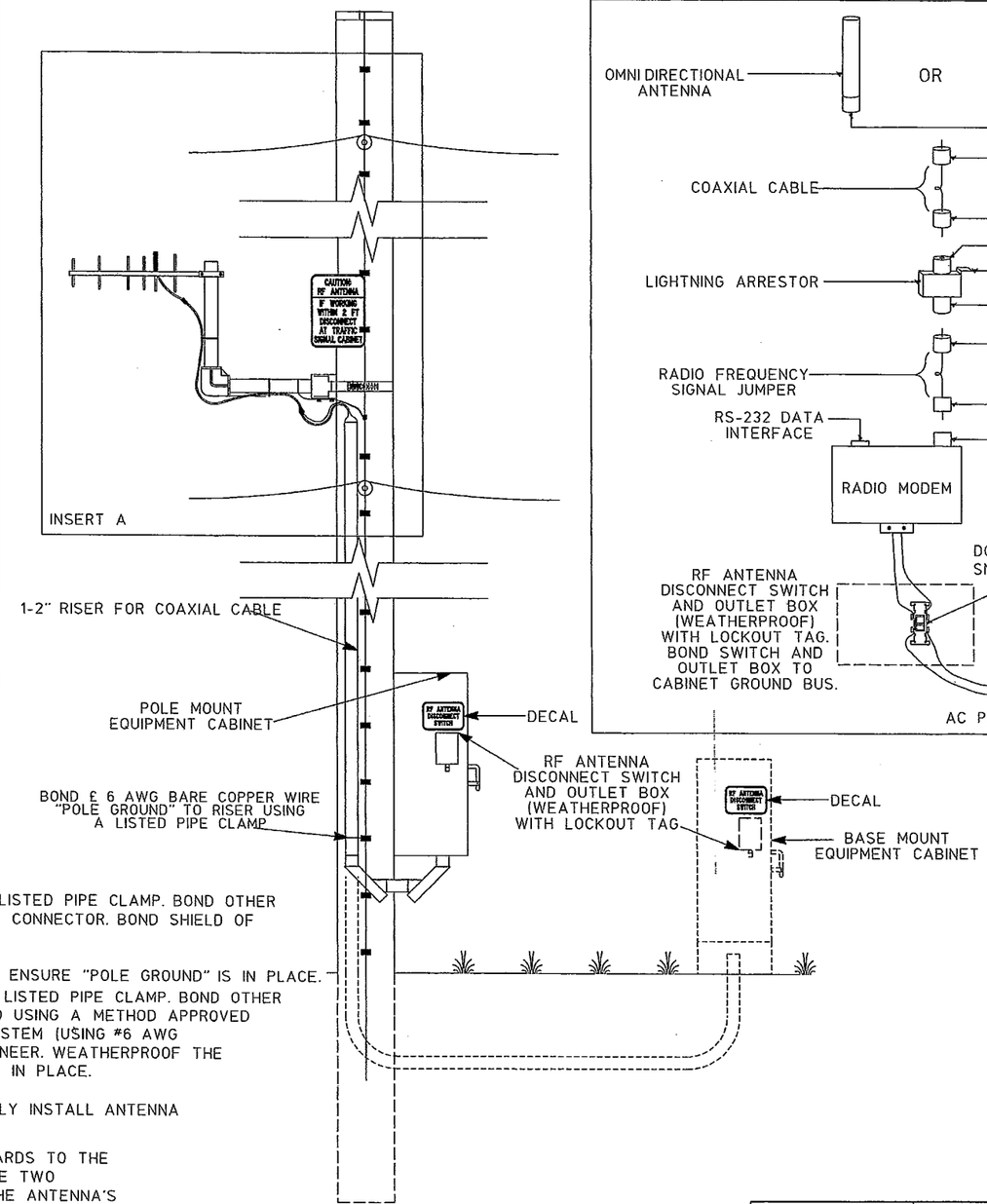

ANTENNA AND COAXIAL CABLE CONNECTION SCHEMATIC

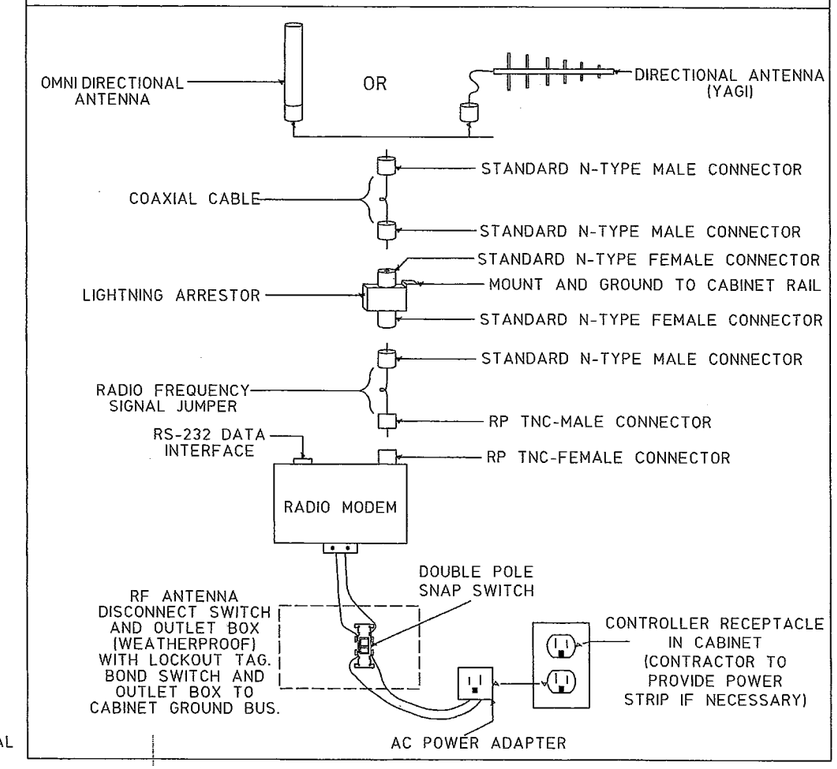

NOTES

1. WOOD POLE -- BOND #6 AWG SOLID BARE COPPER WIRE TO ANTENNA SUPPORT USING LISTED PIPE CLAMP. BOND OTHER END OF #6 AWG SOLID BARE COPPER WIRE TO THE POLE GROUND USING A SPLIT BOLT CONNECTOR. BOND SHIELD OF COAXIAL CABLE WITH AN APPROVED GROUNDING SYSTEM (USING #6 AWG STRANDED COPPER WIRE) BONDED TO THE POLE GROUND. WEATHERPROOF THE CONNECTION ONCE THE GROUNDING SYSTEM IS INSTALLED. ENSURE "POLE GROUND" IS IN PLACE.
   METAL POLE -- BOND #6 AWG SOLID BARE COPPER WIRE TO ANTENNA SUPPORT USING LISTED PIPE CLAMP. BOND OTHER END OF #6 AWG SOLID BARE COPPER WIRE TO THE POLE OR EXISTING SYSTEM GROUND USING A METHOD APPROVED BY THE ENGINEER. BOND SHIELD OF COAXIAL CABLE WITH AN APPROVED GROUNDING SYSTEM (USING #6 AWG STRANDED COPPER WIRE) BONDED TO THE POLE BY A METHOD APPROVED BY THE ENGINEER. WEATHERPROOF THE CONNECTION ONCE THE GROUNDING SYSTEM IS INSTALLED. ENSURE "SYSTEM GROUND" IS IN PLACE.
2. YAGI ANTENNA SHOWN IN VERTICAL POLARIZATION POSITION FOR CLARIFICATION. TYPICALLY INSTALL ANTENNA IN HORIZONTAL POLARIZATION POSITION.
3. TO CONSERVE VERTICAL SPACING ON THE POLE (JOINT-USE OR SIGNAL POLE) WITH REGARDS TO THE SURROUNDING UTILITIES, INSTALL THE ANTENNA MOUNTING HARDWARE USING ONE OF THE TWO METHODS LISTED BELOW: (ENSURE THAT THE MOUNTING METHOD DOES NOT DEGRADE THE ANTENNA'S SIGNAL INTEGRITY)
   A) ROTATE THE VERTICAL SUPPORT ARM 90 DEGREES SUCH THAT THE ANTENNA IS AT THE SAME HEIGHT AS THE HORIZONTAL SUPPORT ARM.
   B) ELIMINATE THE VERTICAL SUPPORT ARM AND MOUNT THE ANTENNA TO THE HORIZONTAL SUPPORT ARM.
   C) ANTENNA, ANTENNA SUPPORT ARM, AND SIGN SHALL MAINTAIN 40" MIN. SEPARATION FROM NEUTRAL / POWER AND 12" MIN. FROM OTHER UTILITIES.
4. INSTALL AN END CAP TO SEAL THE EXPOSED END OF THE MOUNTING PIPE.

NC DEPARTMENT OF TRANSPORTATION
DIVISION OF HIGHWAYS
FINAL DRAWING Date: 4/14/10
Traffic Engineering Branch

DURHAM
1869
CITY OF MEDICINE
City of Durham
101 City Hall Plaza
Durham, NC 27701

Prepared in the Offices of:
Traffic Engineering and Safety Systems Branch
DIVISION OF HIGHWAYS
DEPARTMENT OF TRANSPORTATION
Traffic Management Systems
750 Greenfield Pkwy., Garner, NC 27529

WIRELESS
RADIO ANTENNA
TYPICAL DETAILS

PLAN DATE:	JULY 2005	REVIEWED BY:	I. N. AVERY
PREPARED BY:	A. CREECH	REVIEWED BY:	A. T. FAULKNER

SCALE: 0

REVISIONS	INIT.	DATE

SEAL
NORTH CAROLINA PROFESSIONAL SEAL 032040 ENGINEER JOSEPH NICHOLAS IV
SIGNATURE
2-22-10
DATE
CADD Filename:

PROJECT REFERENCE NO.	SHEET NO.
	Sig. 9

DECAL

SIGN NUMBER: SP05224
TYPE: DECAL
QUANTITY:

SIGN WIDTH: 0'-9"
HEIGHT: 0'-6"
TOTAL AREA: 0.4 Sq.Ft.

BORDER TYPE: FLUSH
RECESS: 0"
WIDTH: 0.25"
RADII: 1"

NO. Z BARS:
LENGTH:

BACKG COLOR: Yellow
COPY COLOR: Black

SYMBOL	X	Y	WID	HT

MAT'L: 0.063" (1.6 mm) ALUMINUM

USE NOTES: 2, 4

1. Legend and border shall be direct applied Type III reflective sheeting.
2. Legend and border shall be direct applied non-reflective sheeting.
3. Shields shall be Type III reflective sheeting on 0.032" (0.8mm) aluminum and demountable.
4. Background shall be Type III reflective sheeting.
5. Background shall be Type I reflective sheeting.
6. Center arrow(s) vertically on sign.
7. Bottom panel shall be yellow Type III sheeting. Legend shall be direct applied black non-reflective sheeting. Yellow panel is:

DESIGN BY: S PIOTROWSKI DATE: Jul 18,2005 CHECKED BY: SUSAN B. KUNZ
PROJECT ID: ID DIV: INTELLIGENT TRANSPORTATION SYSTEM

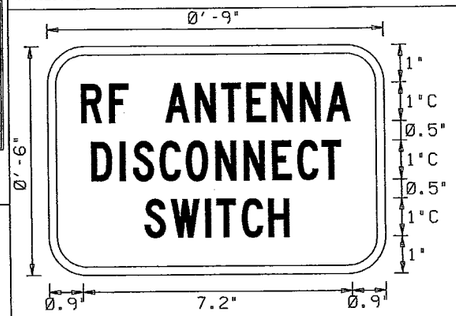

BORDER
R=1"
TH=0.25"

NOTE:

THIS SIGN SHALL BE PRODUCED AS A DECAL

LETTER POSITIONS

Letter spacings are to start of next letter

																														Series/Size Text Length
	R	F		A	N	T	E	N	N	A																				C1
0.9	0.8	0.5	1	0.8	0.7	0.7	0.7	0.8	0.7	0.6	0.9																			7.2
	D	I	S	C	O	N	N	E	C	T																				C1
1.2	0.8	0.3	0.7	0.7	0.8	0.8	0.8	0.7	0.7	0.5	1.2																			6.7
	S	W	I	T	C	H																								C1
2.6	0.7	0.9	0.3	0.7	0.7	0.5	2.6																							3.9

Spacing Factor is 1 unless specified otherwise

POLE MOUNTED SIGN

SIGN NUMBER: SP05223
TYPE: D
QUANTITY:

SIGN WIDTH: 0'-9"
HEIGHT: 1'-0"
TOTAL AREA: 0.8 Sq.Ft.

BORDER TYPE: FLUSH
RECESS: 0"
WIDTH: 0.2"
RADII: 1"

NO. Z BARS:
LENGTH:

BACKG COLOR: Yellow
COPY COLOR: Black

SYMBOL	X	Y	WID	HT
BAR	0.2	8.2	8.6	1.0

MAT'L: 0.063" (1.6 mm) ALUMINUM

USE NOTES: 2, 4

1. Legend and border shall be direct applied Type III reflective sheeting.
2. Legend and border shall be direct applied non-reflective sheeting.
3. Shields shall be Type III reflective sheeting on 0.032" (0.8mm) aluminum and demountable.
4. Background shall be Type III reflective sheeting.
5. Background shall be Type I reflective sheeting.
6. Center arrow(s) vertically on sign.
7. Bottom panel shall be yellow Type III sheeting. Legend shall be direct applied black non-reflective sheeting. Yellow panel is:

DESIGN BY: S PIOTROWSKI DATE: Jul 18,2005 CHECKED BY: SUSAN KUNZ
PROJECT ID: DIV: INTELLIGENT TRANSPORTATION SYSTEMS

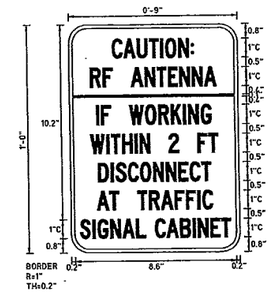

0.60 SPACING FACTOR

LETTER POSITIONS

Letter spacings are to start of next letter

																														Series/Size Text Length
	C	A	U	T	I	O	N	:																						C1
2.3	0.6	0.7	0.6	0.6	0.3	0.7	0.7	0.1	2.3																					4.4
	R	F		A	N	T	E	N	N	A																				C1
1.1	0.7	0.5	1	0.7	0.6	0.6	0.6	0.7	0.6	0.6	1.1																			6.7
	I	F		W	O	R	K	I	N	G																				C1
1.4	0.3	0.5	1	0.8	0.7	0.7	0.6	0.3	0.7	0.5	1.4																			6.1
	W	I	T	H	I	N		2		F	T																			C1
1.1	0.9	0.2	0.6	0.7	0.3	0.5	1	0.5	1	0.6	0.5	1.1																		6.8
	D	I	S	C	O	N	N	E	C	T																				C1
1.5	0.7	0.3	0.6	0.6	0.7	0.7	0.7	0.6	0.6	0.5	1.5																			6
	A	T		T	R	A	F	F	I	C																				C1
1.4	0.7	0.5	1	0.5	0.6	0.7	0.6	0.5	0.3	0.6	1.4																			6.2
	S	I	G	N	A	L																								C1
0.5	0.7	0.3	0.7	0.6	0.7	0.5	5																							3.5
	C	A	B	I	N	E	T																							C1
4.5	0.6	0.7	0.7	0.3	0.7	0.6	0.5	0.5																						4

Spacing Factor is 1 unless specified otherwise

NC DEPARTMENT OF TRANSPORTATION
DIVISION OF HIGHWAYS
FINAL DRAWING Date: 4/14/10
R. Zm
Traffic Engineering Branch

DURHAM 1869 CITY OF MEDICINE
City of Durham
101 City Hall Plaza
Durham, NC 27701

Prepared in the Offices of:
Traffic Engineering and Safety Systems Branch
Traffic Management Systems
750 Greenfield Pkwy., Garner, NC 27529

SCALE
0

WIRELESS
RADIO ANTENNA
TYPICAL DETAILS

PLAN DATE:	JULY 2005	REVIEWED BY:	I. N. AVERY
PREPARED BY:	A. CREECH	REVIEWED BY:	A. T. FAULKNER

REVISIONS	BY:	DATE

SEAL
NORTH CAROLINA PROFESSIONAL SEAL 032040 ENGINEER JOSEPH MICHAEL
SIGNATURE 2-22-10 DATE
CADD Filename:

PROJECT REFERENCE NO.	SHEET NO.
	Sig 1

PHASING DIAGRAM

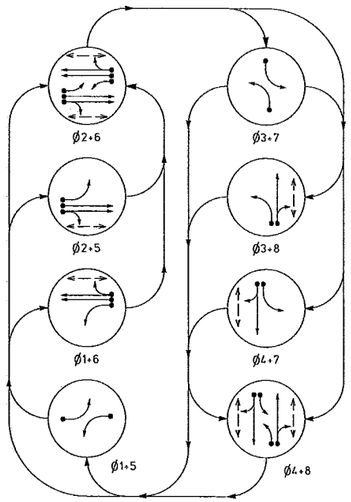

PHASING DIAGRAM DETECTION LEGEND

- DETECTED MOVEMENT
- UNDETECTED MOVEMENT (OVERLAP)
- UNSIGNALIZED MOVEMENT
- PEDESTRIAN MOVEMENT

TABLE OF OPERATION

SIGNAL FACE	PHASE Ø1+5	Ø1+6	Ø2+5	Ø2+6	Ø3+7	Ø3+8	Ø4+7	Ø4+8	FLASH
21	R	R	G	G	R	R	R	R	Y
22	R	R	G	G	R	R	R	R	Y
41	R	R	R	R	R	R	G	G	R
42	R	R	R	R	R	R	G	G	R
61	R	G	R	G	R	R	R	R	Y
62	R	G	R	G	R	R	R	R	Y
81	R	R	R	R	R	G	R	G	R
82	R	R	R	R	R	G	R	G	R
P21, P22	DW	DW	W	W	DW	DW	DW	DW	DRK
P41, P42	DW	DW	DW	DW	DW	DW	W	W	DRK
P61, P62	DW	W	DW	W	DW	DW	DW	DW	DRK
P81, P82	DW	DW	DW	DW	DW	W	DW	W	DRK

DRK - Dark Signal Face
W - Walk
DW - Don't Walk

SIGNAL FACE I.D.

All Heads L.E.D.

LOOP & DETECTOR UNIT INSTALLATION CHART
170 CONTROLLER AND CABINET

INDUCTIVE LOOPS						DETECTOR PROGRAMMING														
							TIMING		ATTRIBUTES									STATUS	
LOOP NO.	SIZE (ft)	DIST. FROM STOPBAR (ft)	TURNS	NEW	EXISTING	NEMA PHASE	DELAY	CARRY (STRETCH)	1 FULL TIME REAR	2 PEDESTRIAN CALL	3 RESERVED	4 COUNT	5 EXTENSION	6 TYPE 3	7 CALLING	8 ALTERNATE	SYSTEM LOOPS	NEW	EXISTING
1A	6X15	0	2-4-2		X	1	15 SEC.	- SEC.					X		X				X
						4	15 SEC.	- SEC.							X				X
						6	- SEC.	- SEC.					X		X				X
2A	6X6	280	4		X	2	- SEC.	1.2 SEC.					X		X				X
2B	6X6	280	4		X	2	- SEC.	1.2 SEC.					X		X				X
2C	6X6	90	4	X		2	- SEC.	- SEC.					X		X			X	
2D	6X6	90	4	X		2	- SEC.	- SEC.					X		X			X	
⚠3A	6X40	0	2-4-2	X		3	15 SEC.	- SEC.					X		X				X
						8	3 SEC.	- SEC.					X		X				X
⚠4A	6X40	0	2-4-2	X		4	10 SEC.	- SEC.					X		X				X
5A	6X15	0	2-4-2		X	5	15 SEC.	- SEC.					X		X				X
						4	15 SEC.	- SEC.							X				X
						2	- SEC.	- SEC.					X		X				X
6A	6X6	300	4		X	6	- SEC.	1.6 SEC.					X		X				X
6B	6X6	300	4		X	6	- SEC.	1.6 SEC.					X		X				X
6C	6X6	90	4	X		6	- SEC.	- SEC.					X		X			X	
6D	6X6	90	4	X		6	- SEC.	- SEC.					X		X			X	
⚠7A	6X40	0	2-4-2	X		4	3 SEC.	- SEC.					X		X				X
						7	15 SEC.	- SEC.					X		X				X
8A	6X40	0	2-4-2	X		8	10 SEC.	- SEC.					X		X			X	
PEDESTRIAN DETECTION																			
P21,P22	N/A	N/A	N/A	X		2	- SEC.	- SEC.		X								X	
P41,P42	N/A	N/A	N/A	X		4	- SEC.	- SEC.		X								X	
P61,P62	N/A	N/A	N/A	X		6	- SEC.	- SEC.		X								X	
P81,P82	N/A	N/A	N/A	X		8	- SEC.	- SEC.		X								X	

8 Phase
Fully Actuated
(Durham Signal System)

NOTES

1. Refer to "Roadway Standard Drawings NCDOT" dated July 2006, "Standard Specifications for Roads and Structures" dated July 2006, and all applicable sections of the latest version of the generic Project Special Provisions. The PSP can be accessed at the following website: http://www.ncdot.org/doh/preconstruct/traffic/itss/
2. Do not program signal for late night flashing operation unless otherwise directed by the Engineer.
3. Pavement markings are existing unless otherwise shown.
4. Program phases 1, 3, 5 and 7 as protected/permissive.
5. Program controller to clear from phase 2+6 to phases 1 and/or 5 by progressing through phase 4+8 (see Electrical Details).
6. Reposition existing signal heads numbered 42 and 82.
7. Set all detector units to presence mode.
8. Program all timing information into phase banks 1, 2 and 3 unless otherwise noted.
9. Set phase bank 3 maximum limit to 250 seconds for phases used.
10. Omit "WALK" and flashing "DON'T WALK" with no pedestrian calls.
11. Program pedestrian heads to count down the flashing "Don't Walk" time only.
12. Maximum times shown in timing chart are for free-run operation only. Coordinated signal system timing values supersede these values.
13. In the event of loop replacement, refer to the current ITS and Signals Design Manual and submit a Plan of Record to the Signal Design Section.
14. Existing "Left Turn Yield on Green" ball signs (R10-12) may be removed at the discretion of the Regional Traffic Engineer.

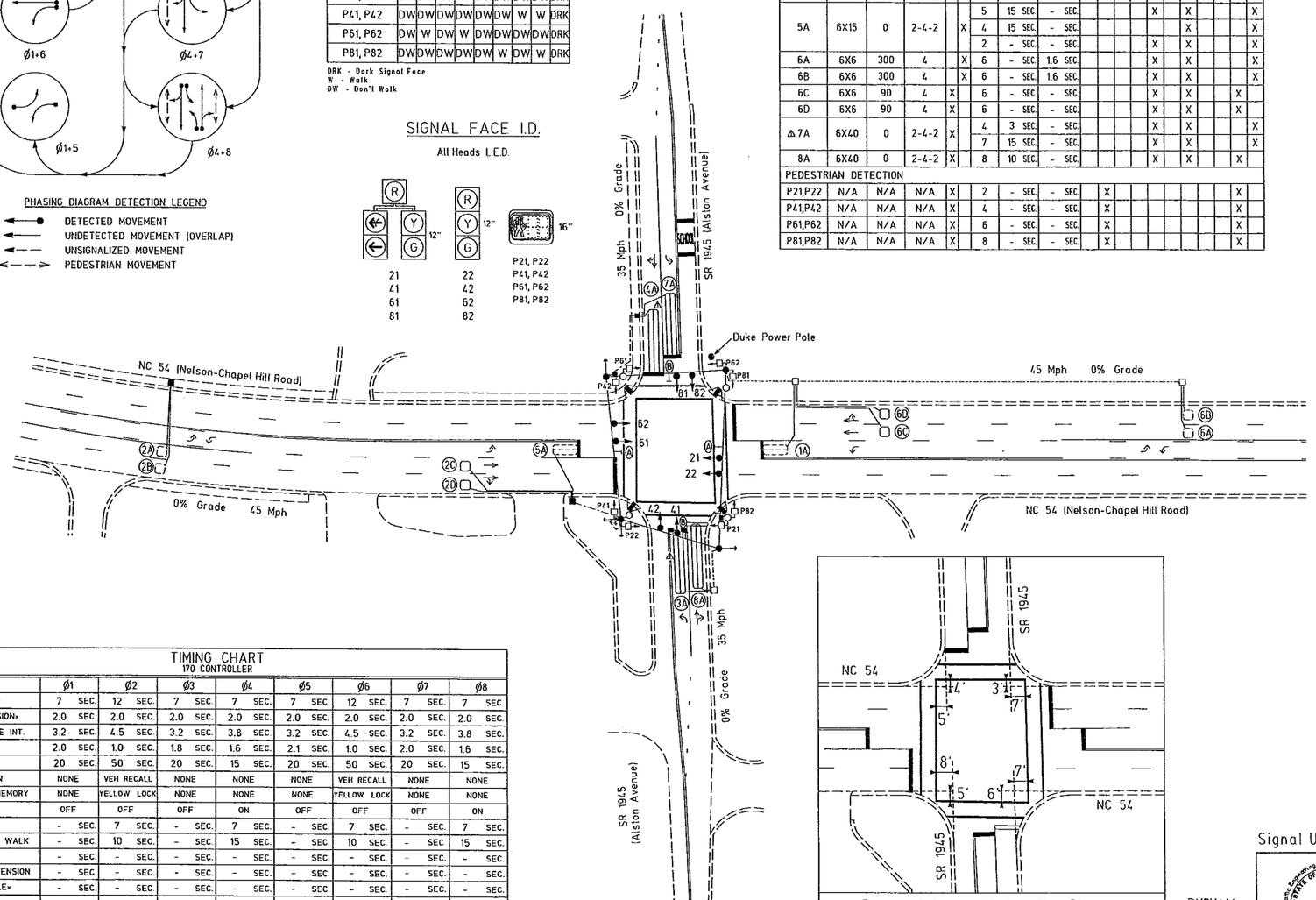

Proposed Crosswalk Location Diagram
(Not to Scale)

Crosswalk lines are 8 inches thick with 8 feet of separation.
Locate proposed stopbars 4 feet behind and parallel to crosswalks.

LEGEND

PROPOSED		EXISTING
	Traffic Signal Head	
	Modified Signal Head	N/A
	Sign	
	Pedestrian Signal Head With Push Button & Sign	
	Signal Pole with Guy	
	Signal Pole with Sidewalk Guy	
	Inductive Loop Detector	
	Controller & Cabinet	
	Junction Box	
	2-in Underground Conduit	
N/A	Right of Way with Marker	
	Directional Arrow	
	Pedestal for Pedestrian Pushbuttons	
	Stop Bar	
	Wheelchair Ramp	
Ⓐ	Left Arrow "ONLY" Sign (R3-5L)	Ⓐ
Ⓑ	"Left Turn Yield On Green Ball" Sign (R10-12)	Ⓑ

TIMING CHART
170 CONTROLLER

PHASE	Ø1	Ø2	Ø3	Ø4	Ø5	Ø6	Ø7	Ø8
MINIMUM INITIAL*	7 SEC.	12 SEC.	7 SEC.	7 SEC.	7 SEC.	12 SEC.	7 SEC.	7 SEC.
VEHICLE EXTENSION*	2.0 SEC.	2.0 SEC.	2.0 SEC.	2.0 SEC.	2.0 SEC.	2.0 SEC.	2.0 SEC.	2.0 SEC.
YELLOW CHANGE INT.	3.2 SEC.	4.5 SEC.	3.2 SEC.	3.8 SEC.	3.2 SEC.	4.5 SEC.	3.2 SEC.	3.8 SEC.
RED CLEARANCE	2.0 SEC.	1.0 SEC.	1.8 SEC.	1.6 SEC.	2.1 SEC.	1.0 SEC.	2.0 SEC.	1.6 SEC.
MAXIMUM LIMIT*	20 SEC.	50 SEC.	20 SEC.	15 SEC.	20 SEC.	50 SEC.	20 SEC.	15 SEC.
RECALL POSITION	NONE	VEH RECALL	NONE	NONE	NONE	VEH RECALL	NONE	NONE
VEHICLE CALL MEMORY	NONE	YELLOW LOCK	NONE	NONE	NONE	YELLOW LOCK	NONE	NONE
DOUBLE ENTRY	OFF	OFF	OFF	ON	OFF	OFF	OFF	ON
WALK*	- SEC.	7 SEC.	- SEC.	7 SEC.	- SEC.	7 SEC.	- SEC.	7 SEC.
FLASHING DON'T WALK	- SEC.	10 SEC.	- SEC.	15 SEC.	- SEC.	10 SEC.	- SEC.	15 SEC.
TYPE 3 LIMIT	- SEC.	- SEC.	- SEC.	- SEC.	- SEC.	- SEC.	- SEC.	- SEC.
ALTERNATE EXTENSION	- SEC.	- SEC.	- SEC.	- SEC.	- SEC.	- SEC.	- SEC.	- SEC.
ADD PER VEHICLE*	- SEC.	- SEC.	- SEC.	- SEC.	- SEC.	- SEC.	- SEC.	- SEC.
MAXIMUM INITIAL*	- SEC.	- SEC.	- SEC.	- SEC.	- SEC.	- SEC.	- SEC.	- SEC.
MAXIMUM GAP*	2.0 SEC.	2.0 SEC.	2.0 SEC.	2.0 SEC.	2.0 SEC.	2.0 SEC.	2.0 SEC.	2.0 SEC.
REDUCE 0.1 SEC EVERY*	- SEC.	- SEC.	- SEC.	- SEC.	- SEC.	- SEC.	- SEC.	- SEC.
MINIMUM GAP	2.0 SEC.	2.0 SEC.	2.0 SEC.	2.0 SEC.	2.0 SEC.	2.0 SEC.	2.0 SEC.	2.0 SEC.

* These values may be field adjusted. Do not adjust Min Green and Extension times for phases 2 and 6 lower than what is shown. Min Green for all other phases should not be lower than 4 seconds. Set Maximum Limit ii to 255 seconds.

DURHAM
1869
City of Durham
101 City Hall Plaza
Durham, NC 27701

Signal Upgrade

Traffic Engineering and Safety Systems Branch
STATE OF NORTH CAROLINA
DEPARTMENT OF TRANSPORTATION
Signal Design Section
750 Greenfield Pkwy, Garner, NC 27529

SCALE 0 40
1"=40'

NC 54 (Nelson-Chapel Hill Road)
at
SR 1945 (Alston Avenue)

Division 5 Durham County Durham

PLAN DATE:	JUNE 2010	REVIEWED BY:	P NICHOLAS
PREPARED BY:	L TRACEY	REVIEWED BY:	P LOZIUK

REVISIONS	INT.	DATE
1 Loop upgrade	CJH	10-27-10

SEAL
This document originally issued and sealed by Peter Joseph Nicholas IV, 032040, on 8-26-10. This media shall not be considered a certified document.

SIGNATURE DATE

SIG. INVENTORY NO. 05-0607

PROJECT REFERENCE NO.	SHEET NO.
U-5142	SIG. 1

8 Phase
Fully Actuated
with EV Preemption
(Durham Signal System)

PHASING DIAGRAM

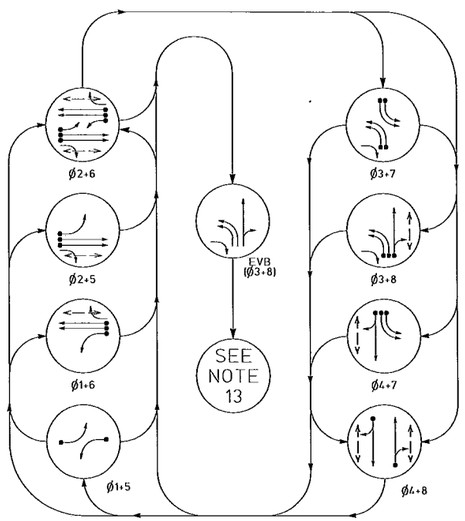

PHASING DIAGRAM DETECTION LEGEND

- DETECTED MOVEMENT
- UNDETECTED MOVEMENT (OVERLAP)
- UNSIGNALIZED MOVEMENT
- PEDESTRIAN MOVEMENT

TABLE OF OPERATION

SIGNAL FACE	PHASE Ø1+5	Ø1+6	Ø2+5	Ø2+6	Ø3+7	Ø3+8	Ø4+7	Ø4+8	EVB	FLASH
21	R	R	G	G	R	R	R	R	R	Y
22	R	R	G	G	R	R	R	R	R	Y
23	R	R	G	G	R	R	R	R	R	Y
31, 32	R	R	R	R	R	R	R	R	R	R
41, 42	R	R	R	R	R	R	G	G	R	R
61	R	G	R	G	R	R	R	R	R	Y
62	R	G	R	G	R	R	R	R	R	Y
71, 72	R	R	R	R	R	R	R	R	R	R
81, 82	R	R	R	R	R	G	R	G	G	R
P21, P22	DW	DW	W	W	DW	DW	DW	DW	DW	DRK
P41, P42	DW	DW	DW	DW	DW	DW	W	W	DW	DRK
P61, P62	DW	W	DW	W	DW	DW	DW	DW	DW	DRK
P81, P82	DW	DW	DW	DW	DW	W	DW	W	DW	DRK

DRK - Dark Signal Face
W - Walk
DW - Don't Walk

LOOP & DETECTOR UNIT INSTALLATION CHART
170 CONTROLLER AND CABINET

INDUCTIVE LOOPS: LOOP NO.	SIZE (ft)	TURNS	DIST. FROM STOPBAR (ft)	STATUS NEW	STATUS EXISTING	DETECTOR PROGRAMMING: NEMA PHASE	TIMING: DELAY	TIMING: CARRY (STRETCH)	ATTRIBUTES 1 FULL TIME DELAY	2 PRESENCE ONLY	3 NEGATIVE ERROR	4 COUNT	5 EXTENDED	6 TYPE 3	7 CALLING	8 ALTERNATE	SYSTEM LOOPS	STATUS NEW	STATUS EXISTING
1A	6X40	2-4-2	0	X		1	15 SEC.	- SEC.					X		X			X	
						4	15 SEC.	- SEC.							X			X	
						6	- SEC.	- SEC.					X		X			X	
2A	6X6	4	70	X		2	- SEC.	- SEC.					X		X			X	
2B	6X6	4	70	X		2	- SEC.	- SEC.					X		X			X	
3A	6X40	2-4-2	0	X		3	15 SEC.	- SEC.					X		X			X	
3B	6X40	2-4-2	0	X		8	3 SEC.	- SEC.					X		X			X	
4A	6X40	2-4-2	0	X		4	10 SEC.	- SEC.					X		X			X	
5A	6X40	2-4-2	0	X		5	15 SEC.	- SEC.					X		X			X	
						4	15 SEC.	- SEC.							X			X	
						2	- SEC.	- SEC.					X		X			X	
6A	6X6	4	70	X		6	- SEC.	- SEC.					X		X			X	
6B	6X6	4	70	X		6	- SEC.	- SEC.					X		X			X	
7A	6X40	2-4-2	0	X		4	3 SEC.	- SEC.					X		X			X	
7B	6X40	2-4-2	0	X		7	15 SEC.	- SEC.					X		X			X	
8A	6X40	2-4-2	0	X		8	10 SEC.	- SEC.					X		X			X	
S236	×	N/A	+490		X	8	10 SEC.	- SEC.				X					X		X
S237	×	N/A	360		X	8	10 SEC.	- SEC.				X					X		X
PEDESTRIAN DETECTION																			
P21,P22	N/A	N/A	N/A		X	2	- SEC.	- SEC.		X									X
P41,P42	N/A	N/A	N/A		X	4	- SEC.	- SEC.		X									X
P61,P62	N/A	N/A	N/A		X	6	- SEC.	- SEC.		X									X
P81,P82	N/A	N/A	N/A		X	8	- SEC.	- SEC.		X									X

× Microloop System Detectors

NOTES

1. Refer to "Roadway Standard Drawings NCDOT" dated July 2006, "Standard Specifications for Roads and Structures" dated July 2006, and all applicable sections of the latest version of the generic Project Special Provisions. The PSP can be accessed at the following website:
http://www.ncdot.org/doh/preconstruct/traffic/itss/
2. Do not program signal for late night flashing operation unless otherwise directed by the Engineer.
3. Pavement markings are existing.
4. Program phases 1 and 5 as protected/permissive.
5. Program controller to clear from phase 2+6 to phases 1 and/or 5 by progressing through phase 4+8 (see Electrical Details).
6. Phase 3 or phase 7 may be lagged.
7. Set all detector units to presence mode.
8. Program all timing information into phase banks 1, 2 and 3 unless otherwise noted.
9. Set phase bank 3 maximum limit to 250 seconds for phases used.
10. Omit "WALK" and flashing "DON'T WALK" with no pedestrian calls.
11. Program pedestrian heads to count down the flashing "Don't Walk" time only.
12. Maximum times shown in timing chart are for free-run operation only. Coordinated signal system timing values supersede these values.
13. Upon completion of emergency vehicle preemption phase, controller returns to normal operation based on vehicle demand.
14. In the event of loop replacement, refer to the current ITS and Signals Design Manual and submit a Plan of Record to the Signal Design Section.
15. This intersection features an optical preemption system. Shown locations of optical detectors are conceptual only.

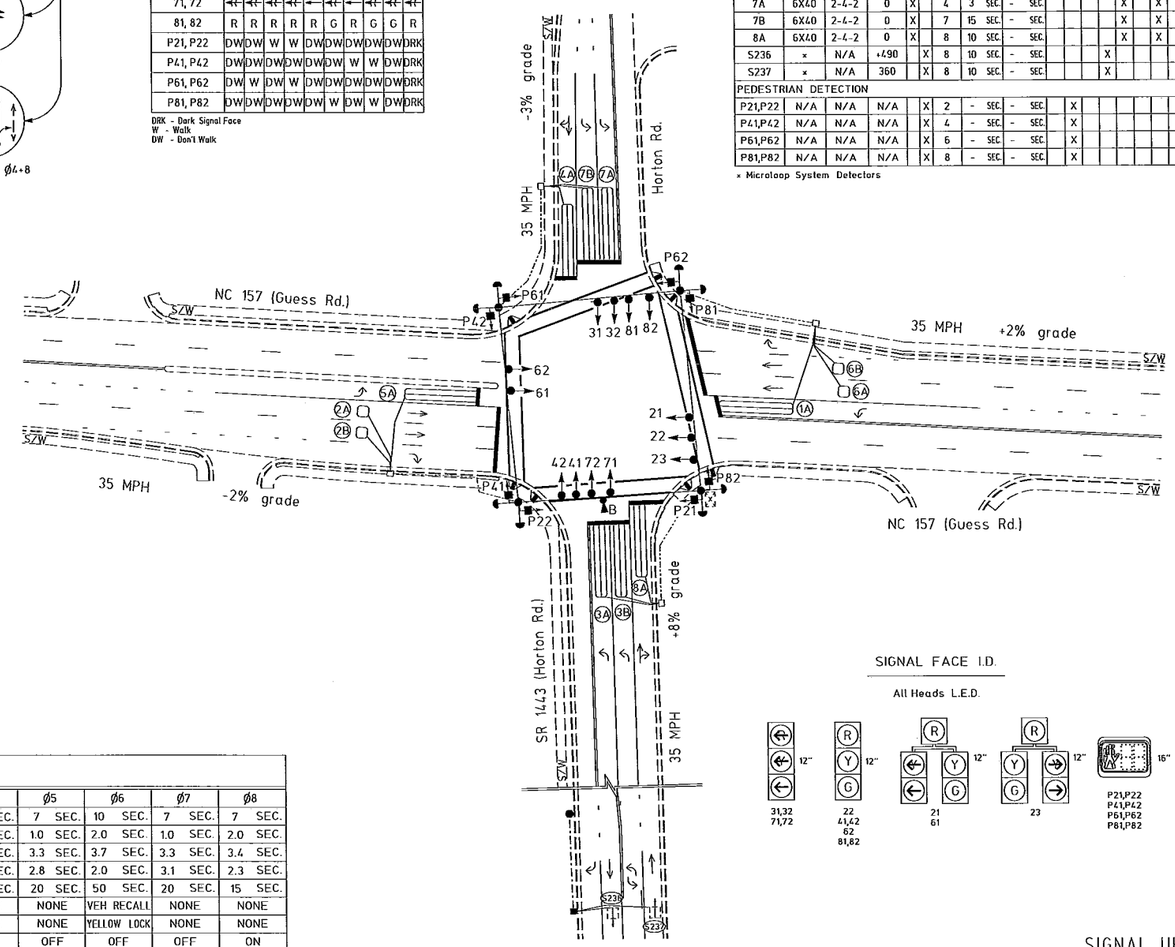

170 EV PREEMPTION

FUNCTION	EVB
DELAY BEFORE PREEMPT	0
PED. CLEAR BEFORE PREEMPT	0
MIN. GREEN BEFORE PREEMPT	1.0
CLEARANCE TIME	20
PREEMPT EXTEND×	2.0

×Program Timing on Optical Detection Unit

SIGNAL FACE I.D.

All Heads L.E.D.

TIMING CHART
170 CONTROLLER

PHASE	Ø1	Ø2	Ø3	Ø4	Ø5	Ø6	Ø7	Ø8
MINIMUM INITIAL×	7 SEC.	10 SEC.	7 SEC.	7 SEC.	7 SEC.	10 SEC.	7 SEC.	7 SEC.
VEHICLE EXTENSION×	1.0 SEC.	2.0 SEC.	1.0 SEC.	2.0 SEC.	1.0 SEC.	2.0 SEC.	1.0 SEC.	2.0 SEC.
YELLOW CHANGE INT.	3.1 SEC.	4.0 SEC.	3.0 SEC.	4.1 SEC.	3.3 SEC.	3.7 SEC.	3.3 SEC.	3.4 SEC.
RED CLEARANCE	2.4 SEC.	2.1 SEC.	2.9 SEC.	2.3 SEC.	2.8 SEC.	2.0 SEC.	3.1 SEC.	2.3 SEC.
MAXIMUM LIMIT×	20 SEC.	50 SEC.	20 SEC.	15 SEC.	20 SEC.	50 SEC.	20 SEC.	15 SEC.
RECALL POSITION	NONE	VEH RECALL	NONE	NONE	NONE	VEH RECALL	NONE	NONE
VEHICLE CALL MEMORY	NONE	YELLOW LOCK	NONE	NONE	NONE	YELLOW LOCK	NONE	NONE
DOUBLE ENTRY	OFF	OFF	OFF	ON	OFF	OFF	OFF	ON
WALK×	- SEC.	7 SEC.	- SEC.	7 SEC.	- SEC.	7 SEC.	- SEC.	7 SEC.
FLASHING DON'T WALK	- SEC.	19 SEC.	- SEC.	21 SEC.	- SEC.	21 SEC.	- SEC.	25 SEC.
TYPE 3 LIMIT	- SEC.	- SEC.	- SEC.	- SEC.	- SEC.	- SEC.	- SEC.	- SEC.
ALTERNATE EXTENSION	- SEC.	- SEC.	- SEC.	- SEC.	- SEC.	- SEC.	- SEC.	- SEC.
ADD PER VEHICLE×	- SEC.	- SEC.	- SEC.	- SEC.	- SEC.	- SEC.	- SEC.	- SEC.
MAXIMUM INITIAL×	- SEC.	- SEC.	- SEC.	- SEC.	- SEC.	- SEC.	- SEC.	- SEC.
MAXIMUM GAP×	1.0 SEC.	2.0 SEC.	1.0 SEC.	2.0 SEC.	1.0 SEC.	2.0 SEC.	1.0 SEC.	2.0 SEC.
REDUCE 0.1 SEC EVERY×	- SEC.	- SEC.	- SEC.	- SEC.	- SEC.	- SEC.	- SEC.	- SEC.
MINIMUM GAP	1.0 SEC.	2.0 SEC.	1.0 SEC.	2.0 SEC.	1.0 SEC.	2.0 SEC.	1.0 SEC.	2.0 SEC.

× These values may be field adjusted. Do not adjust Min Green and Extension times for phases 2 and 6 lower than what is shown.
Min Green for all other phases should not be lower than 4 seconds
Set Maximum Limit II to 255 seconds.

LEGEND

PROPOSED		EXISTING
	Traffic Signal Head	
	Sign	
	Pedestrian Signal Head With Push Button & Sign	
	Signal Pole with Guy	
	Signal Pole with Sidewalk Guy	
	Inductive Loop Detector	
	Microloop System Detector	
	Controller & Cabinet	
	Pull Box	
	2 in. Underground Conduit	
	Right of Way with Marker	
	Directional Arrow	
	Signal Pedestal	
	Optical Detector	
	Stop Bar	
	Wheelchair Ramp	

SIGNAL UPGRADE

DURHAM 1869 CITY OF MUSIC
City of Durham
101 City Hall Plaza
Durham, NC 27701
(919) 560-4366

STATE OF NORTH CAROLINA DEPARTMENT OF TRANSPORTATION
Traffic Engineering and Safety Systems Branch
Signal Design Section
750 Greenfield Pkwy, Garner, NC 27529

SCALE 0 4.0 1" = 40'

NC 157 (Guess Road)
at
SR 1443 (Horton Road)

DIVISION 5 | DURHAM COUNTY | DURHAM
PLAN DATE: OCTOBER 2010 | REVIEWED BY: P NICHOLAS
PREPARED BY: L TRACEY | REVIEWED BY:

REVISIONS	INIT.	DATE

SEAL
PRELIMINARY PLANS
DO NOT USE FOR CONSTRUCTION
SIGNATURE | DATE
SIG. INVENTORY NO. 05-0956

PROJECT REFERENCE NO.	SHEET NO.
U-5142	SIG. 1

PHASING DIAGRAM

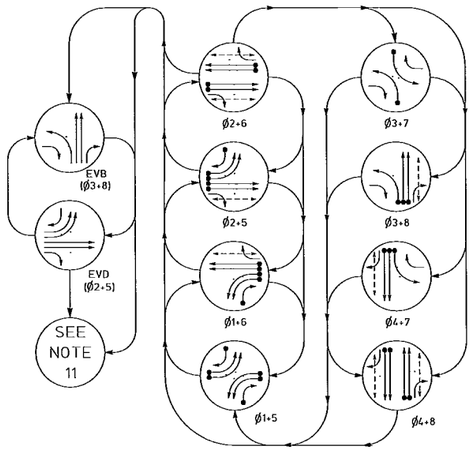

PHASING DIAGRAM DETECTION LEGEND

- DETECTED MOVEMENT
- UNDETECTED MOVEMENT (OVERLAP)
- UNSIGNALIZED MOVEMENT
- PEDESTRIAN MOVEMENT

TABLE OF OPERATION

SIGNAL FACE	PHASE Ø1+5	Ø1+6	Ø2+5	Ø2+6	Ø3+7	Ø3+8	Ø4+7	Ø4+8	EVB	EVD	FLASH
11,12	~~R~~	~~R~~	~~R~~	~~R~~	~~R~~	~~R~~	~~R~~	~~R~~	~~R~~	~~R~~	~~R~~
21	R	R	G	G	R	R	R	R	R	G	Y
22	R	R	G	G	R/	R/	R	R	R/	G	Y
31	~~R~~	~~R~~	~~R~~	~~R~~	~~R~~	~~R~~	~~R~~	~~R~~	~~R~~	~~R~~	~~R~~
41	R	R	R	R	R	R	G	G	R	R	R
42	R/	R	R/	R	R	R	G	G	R	R/	R
51,52	~~R~~	~~R~~	~~R~~	~~R~~	~~R~~	~~R~~	~~R~~	~~R~~	~~R~~	~~R~~	~~R~~
61	R	G	R	G	R	R	R	R	R	R	Y
62	R	G	R	G	R/	R	R/	R	R	R	Y
71	~~R~~	~~R~~	~~R~~	~~R~~	~~R~~	~~R~~	~~R~~	~~R~~	~~R~~	~~R~~	~~R~~
81	R	R	R	R	R	G	R	G	G	R	R
82	R/	R/	R	R	R	G	R	G	G	R	R
P21,P22	DW	DW	W	W	DW	DW	DW	DW	DW	DW	DRK
P41,P42	DW	DW	DW	DW	DW	DW	W	W	DW	DW	DRK
P61,P62	DW	W	DW	W	DW	DW	DW	DW	DW	DW	DRK
P81,P82	DW	DW	DW	DW	DW	W	DW	W	DW	DW	DRK

DRK - Dark Signal Face
W - Walk
DW - Don't Walk

170 LOOP & DETECTOR UNIT INSTALLATION CHART

INDUCTIVE LOOPS: LOOP NO.	SIZE (FT)	TURNS	DST. FROM STOPBAR (FT)	NEW	EXISTING	DETECTOR PROGRAMMING: NEMA PHASE	TIMING: DELAY	CARRY (STRETCH)	ATTRIBUTES: 1 FULL LIFE	2 EXTENDED CALL	3 RESTART	4 RELEASE	5 QUICK	6 EXTENDED	7 TYPE 3	8 CALLED	ALTERNATE	STATUS: SYSTEM LOOPS	NEW	EXISTING
1A	6X40	2-4-2	0		X	1	- SEC.	- SEC.						X		X			X	
1B	6X40	2-4-2	0		X	1	- SEC.	- SEC.						X		X			X	
1C	6X40	2-4-2	0		X	1	10 SEC.	- SEC.						X		X			X	
2A	6X6	5	250		X	2	- SEC.	1.4 SEC.						X		X			X	
2B	6X6	5	250		X	2	- SEC.	1.4 SEC.						X		X			X	
2C	6X6	5	80		X	2	- SEC.	- SEC.						X		X			X	
2D	6X6	5	80		X	2	- SEC.	- SEC.						X		X			X	
3A	6X40	2-4-2	0		X	3	- SEC.	- SEC.						X		X			X	
4A	6X40	2-4-2	0		X	4	- SEC.	- SEC.						X		X			X	
4B	6X40	2-4-2	0		X	4	- SEC.	- SEC.						X		X			X	
5A	6X40	2-4-2	0		X	5	- SEC.	- SEC.						X		X			X	
5B	6X40	2-4-2	0		X	5	- SEC.	- SEC.						X		X			X	
5C	6X40	2-4-2	0		X	5	10 SEC.	- SEC.						X		X			X	
6A	6X6	5	250		X	6	- SEC.	1.4 SEC.						X		X			X	
6B	6X6	5	250		X	6	- SEC.	1.4 SEC.						X		X			X	
6C	6X6	5	80		X	6	- SEC.	- SEC.						X		X			X	
6D	6X6	5	80		X	6	- SEC.	- SEC.						X		X			X	
7A	6X40	2-4-2	0		X	7	- SEC.	- SEC.						X		X			X	
8A	6X40	2-4-2	0		X	8	- SEC.	- SEC.						X		X			X	
8B	6X40	2-4-2	0		X	8	- SEC.	- SEC.						X		X			X	
PEDESTRIAN DETECTION																				
P21,P22	N/A	N/A	N/A	X		2	- SEC.	- SEC.		X										X
P41,P42	N/A	N/A	N/A	X		4	- SEC.	- SEC.		X										X
P61,P62	N/A	N/A	N/A	X		6	- SEC.	- SEC.		X										X
P81,P82	N/A	N/A	N/A	X		8	- SEC.	- SEC.		X										X

8 Phase
Fully Actuated
with EV Preemption
(Durham Signal System)

NOTES

1. Refer to "Roadway Standard Drawings NCDOT" dated July 2006, "Standard Specifications for Roads and Structures" dated July 2006, and all applicable sections of the latest version of the generic Project Special Provisions. The PSP can be accessed at the following website:
http://www.ncdot.org/doh/preconstruct/traffic/itss/
2. Do not program signal for late night flashing operation unless otherwise directed by the Engineer.
3. Pavement markings are existing.
4. Phases 1, 3, 5 or 7 may be lagged.
5. Set all detector units to presence mode.
6. Program all timing information into phase banks 1, 2 and 3 unless otherwise noted.
7. Set phase bank 3 maximum limit to 250 seconds for phases used.
8. Omit "WALK" and flashing "DON'T WALK" with no pedestrian calls.
9. Program pedestrian heads to count down the flashing "Don't Walk" time only.
10. Maximum times shown in timing chart are for free-run operation only. Coordinated signal system timing values supersede these values.
11. Upon completion of emergency vehicle preemption phase, controller returns to normal operation based on vehicle demand.
12. In the event of loop replacement, refer to the current ITS and Signals Design Manual and submit a Plan of Record to the Signal Design Section.
13. This intersection features an optical preemption system. Shown locations of optical detectors are conceptual only.

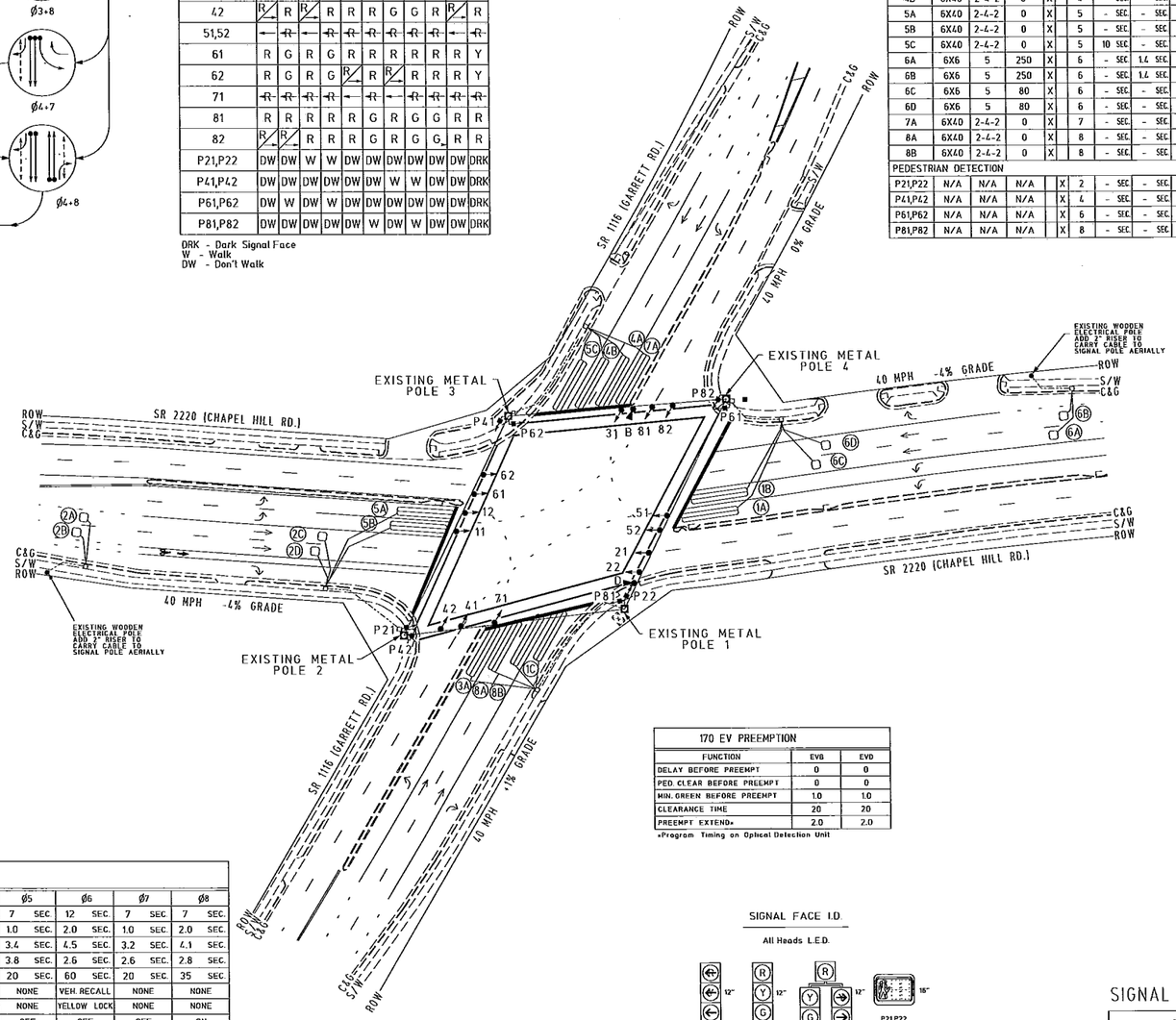

170 EV PREEMPTION

FUNCTION	EVB	EVD
DELAY BEFORE PREEMPT	0	0
PED. CLEAR BEFORE PREEMPT	0	0
MIN. GREEN BEFORE PREEMPT	1.0	1.0
CLEARANCE TIME	20	20
PREEMPT EXTEND*	2.0	2.0

*Program Timing on Optical Detection Unit

LEGEND

PROPOSED		EXISTING
	Traffic Signal Head	
	Sign	
	Pedestrian Signal Head With Push Button & Sign	
	Metal Pole	
	Inductive Loop Detector	
	Controller & Cabinet	
	Pull Box	
	2 in. Underground Conduit	
	Right of Way with Marker	
	Directional Arrow	
	Signal Pedestal	
	Optical Detector	
	Stop Bar	

TIMING CHART
170 CONTROLLER

PHASE	Ø1	Ø2	Ø3	Ø4	Ø5	Ø6	Ø7	Ø8
MINIMUM INITIAL *	7 SEC.	12 SEC.	7 SEC.	7 SEC.	7 SEC.	12 SEC.	7 SEC.	7 SEC.
VEHICLE EXTENSION *	1.0 SEC.	2.0 SEC.	1.0 SEC.	2.0 SEC.	1.0 SEC.	2.0 SEC.	1.0 SEC.	2.0 SEC.
YELLOW CHANGE INT.	3.4 SEC.	4.5 SEC.	3.1 SEC.	4.2 SEC.	3.4 SEC.	4.5 SEC.	3.2 SEC.	4.1 SEC.
RED CLEARANCE	4.1 SEC.	2.4 SEC.	2.5 SEC.	2.9 SEC.	3.8 SEC.	2.6 SEC.	2.6 SEC.	2.8 SEC.
MAXIMUM LIMIT *	30 SEC.	60 SEC.	25 SEC.	35 SEC.	20 SEC.	60 SEC.	20 SEC.	35 SEC.
RECALL POSITION	NONE	VEH. RECALL	NONE	NONE	NONE	VEH. RECALL	NONE	NONE
VEHICLE CALL MEMORY	NONE	YELLOW LOCK	NONE	NONE	NONE	YELLOW LOCK	NONE	NONE
DOUBLE ENTRY	OFF	OFF	OFF	ON	OFF	OFF	OFF	ON
WALK *	- SEC.	7 SEC.	- SEC.	7 SEC.	- SEC.	7 SEC.	- SEC.	7 SEC.
FLASHING DON'T WALK	- SEC.	4.2 SEC.	- SEC.	4.1 SEC.	- SEC.	37 SEC.	- SEC.	36 SEC.
TYPE 3 LIMIT	- SEC.	- SEC.	- SEC.	- SEC.	- SEC.	- SEC.	- SEC.	- SEC.
ALTERNATE EXTENSION	- SEC.	- SEC.	- SEC.	- SEC.	- SEC.	- SEC.	- SEC.	- SEC.
ADD PER VEHICLE *	- SEC.	- SEC.	- SEC.	- SEC.	- SEC.	- SEC.	- SEC.	- SEC.
MAXIMUM INITIAL *	- SEC.	- SEC.	- SEC.	- SEC.	- SEC.	- SEC.	- SEC.	- SEC.
MAXIMUM GAP*	1.0 SEC.	2.0 SEC.	1.0 SEC.	2.0 SEC.	1.0 SEC.	2.0 SEC.	1.0 SEC.	2.0 SEC.
REDUCE 0.1 SEC EVERY *	- SEC.	- SEC.	- SEC.	- SEC.	- SEC.	- SEC.	- SEC.	- SEC.
MINIMUM GAP	1.0 SEC.	2.0 SEC.	1.0 SEC.	2.0 SEC.	1.0 SEC.	2.0 SEC.	1.0 SEC.	2.0 SEC.

* These values may be field adjusted. Do not adjust Min Green and Extension times for phases 2 and 6 lower than what is shown. Min Green for all other phases should not be lower than 4 seconds.

SIGNAL FACE I.D.

All Heads L.E.D.

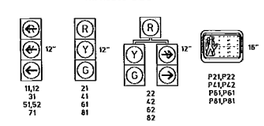

DURHAM
1869
City of Ingenuity
City of Durham
101 City Hall Plaza
Durham, NC 27701
(919) 560-4366

SIGNAL UPGRADE

Traffic Engineering and Safety Systems Branch
STATE OF NORTH CAROLINA
DEPARTMENT OF TRANSPORTATION
Signal Design Section
750 Greenfield Pkwy, Garner, NC 27529

SCALE
0 50
1" = 50'

SR 2220 (Chapel Hill Road)
at
SR 1116 (Garrett Road)

DIVISION 5 | DURHAM COUNTY | DURHAM

PLAN DATE	OCTOBER 2010	REVIEWED BY	P NICHOLAS
PREPARED BY	L TRACEY	REVIEWED BY	

REVISIONS	INIT.	DATE

SEAL
PRELIMINARY PLANS
DO NOT USE FOR CONSTRUCTION

SIGNATURE	DATE
SIG. INVENTORY NO. 05-0853	

PROJECT REFERENCE NO.	SHEET NO.
U-5142	SIG. 1

8 PHASE FULLY ACTUATED WITH EMERGENCY VEHICLE PREEMPTION (DURHAM SIGNAL SYSTEM)

PHASING DIAGRAM

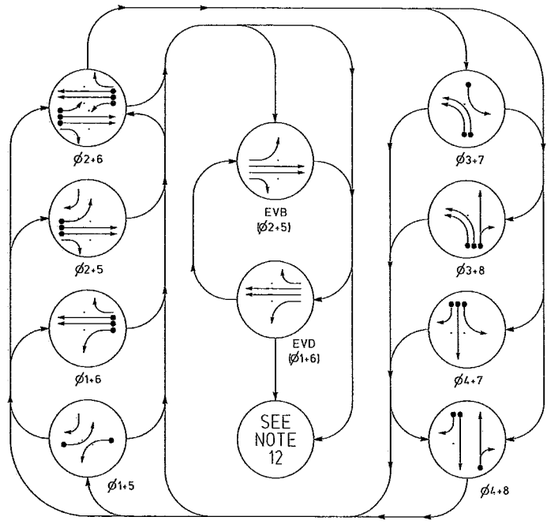

PHASING DIAGRAM DETECTION LEGEND

- DETECTED MOVEMENT
- UNDETECTED MOVEMENT (OVERLAP)
- UNSIGNALIZED MOVEMENT
- PEDESTRIAN MOVEMENT

TABLE OF OPERATION

SIGNAL FACE	PHASE Ø1+5	Ø1+6	Ø2+5	Ø2+6	Ø3+7	Ø3+8	Ø4+7	Ø4+8	EVB	EVD	FLASH
21	↖R	R	↖G	G	R	R	R	R	↖G	R	Y
22, 23	R	R	G	G	R	R	R	R	G	R	Y
31, 32	←R	←R	←R	←R	←	←	←R	←R	←R	←R	←R
41	R	R	R	R	R	R	G	G	R	R	R
42	R↗	R	R↗	R	R	R	G	G	R	R	R
61	↖R	↖G	R	G	R	R	R	R	R	↖G	Y
62, 63	R	G	R	G	R	R	R	R	R	G	Y
71	←R	←R	←R	←R	←	←R	←	←R	←R	←R	←R
81, 82	R	R	R	R	R	G	R	G	R	R	R

LOOP AND DETECTOR INSTALLATION CHART

170 CONTROLLER AND 336 CABINET

INDUCTIVE LOOPS: LOOP	SIZE (ft)	DIST FROM STOPBAR (ft)	TURNS	NEW	EXISTING	DETECTOR PROGRAMMING: NEMA PHASE	TIMING: DELAY	CARRY OVER DETECTOR	ATTRIBUTES 1 PULSE/PRESENCE	2 PULSE/PRESENCE	3 PRESENCE	4 QUICK	5 EXTENSION	6 TYPE 3	7 FAILSAFE	8 NETWORK	9 SYSTEM LOOP	STATUS NEW	EXISTING
1A	6x40	0	2-#2	X		1	10 SEC.	- SEC.					X		X			X	
						6	- SEC.	- SEC.					X		X			X	
						4	25 SEC.	- SEC.							X			X	
2A	6x6	300	6	X		2	- SEC.	1.6 SEC.				X	X		X			X	
2B	6x6	300	6	X		2	- SEC.	1.6 SEC.				X	X		X			X	
2C	6x6	90	6	X		2	- SEC.	- SEC.				X	X		X			X	
2D	6x6	90	6	X		2	- SEC.	- SEC.				X	X		X			X	
3A	6x40	0	2-#2	X		3	3 SEC.	- SEC.					X		X			X	
3B	6x40	0	2-#2	X		3	- SEC.	- SEC.					X		X			X	
4A	6x40	0	2-#2	X		4	- SEC.	- SEC.					X		X			X	
5A	6x40	0	2-#2	X		5	10 SEC.	- SEC.					X		X			X	
						2	- SEC.	- SEC.					X		X			X	
						4	25 SEC.	- SEC.							X			X	
5B	6x40	0	2-#2	X		5	15 SEC.	- SEC.					X		X			X	
						4	25 SEC.	- SEC.							X			X	
6A	6x6	300	6	X		6	- SEC.	1.6 SEC.				X	X		X			X	
6B	6x6	300	6	X		6	- SEC.	1.6 SEC.				X	X		X			X	
6C	6x6	90	6	X		6	- SEC.	- SEC.				X	X		X			X	
6D	6x6	90	6	X		6	- SEC.	- SEC.				X	X		X			X	
7A	6x40	0	2-#2	X		7	3 SEC.	- SEC.					X		X			X	
8A	6x40	0	2-#2	X		8	- SEC.	- SEC.					X		X			X	

NOTES

1. Refer to "Roadway Standard Drawings NCDOT" dated July 2006, "Standard Specifications for Roads and Structures" dated July 2006, and all applicable sections of the latest version of the generic Project Special Provisions. The PSP's can be accessed at the following website: http://www.ncdot.org/doh/preconstruct/traffic/itss/
2. Do not program signal for late night flashing operation unless otherwise directed by the Engineer.
3. Phases 3 and/or 7 may be lagged.
4. Program phase 1 as protected/permissive.
5. Program phase 5 as protected/permissive.
6. Program controller to clear from phase 2+6 to phases 1 and/or 5 by progressing through phase 4+8 (see Electrical Details.)
7. Set all detector units to presence mode.
8. Program all timing information into phase banks 1, 2, and 3 unless otherwise noted.
9. Set phase bank 3 maximum limit to 250 seconds for phases used.
10. Maximum times shown in timing chart are for free-run operation only. Coordinated signal system timing values supersede these values.
11. Pavement markings are existing.
12. When clearing from preempt phase, controller resumes normal operation based on non-conflicting vehicle demand.
13. Existing Opticom EV D detector located in front of Bethesda Volunteer Fire Station.
14. This intersection features an optical preemption system. Shown locations of optical detectors are conceptual only.
15. Program signal heads numbered 21, 22, 23, 61, 62 and 63 to clear to all red before going into preempt.

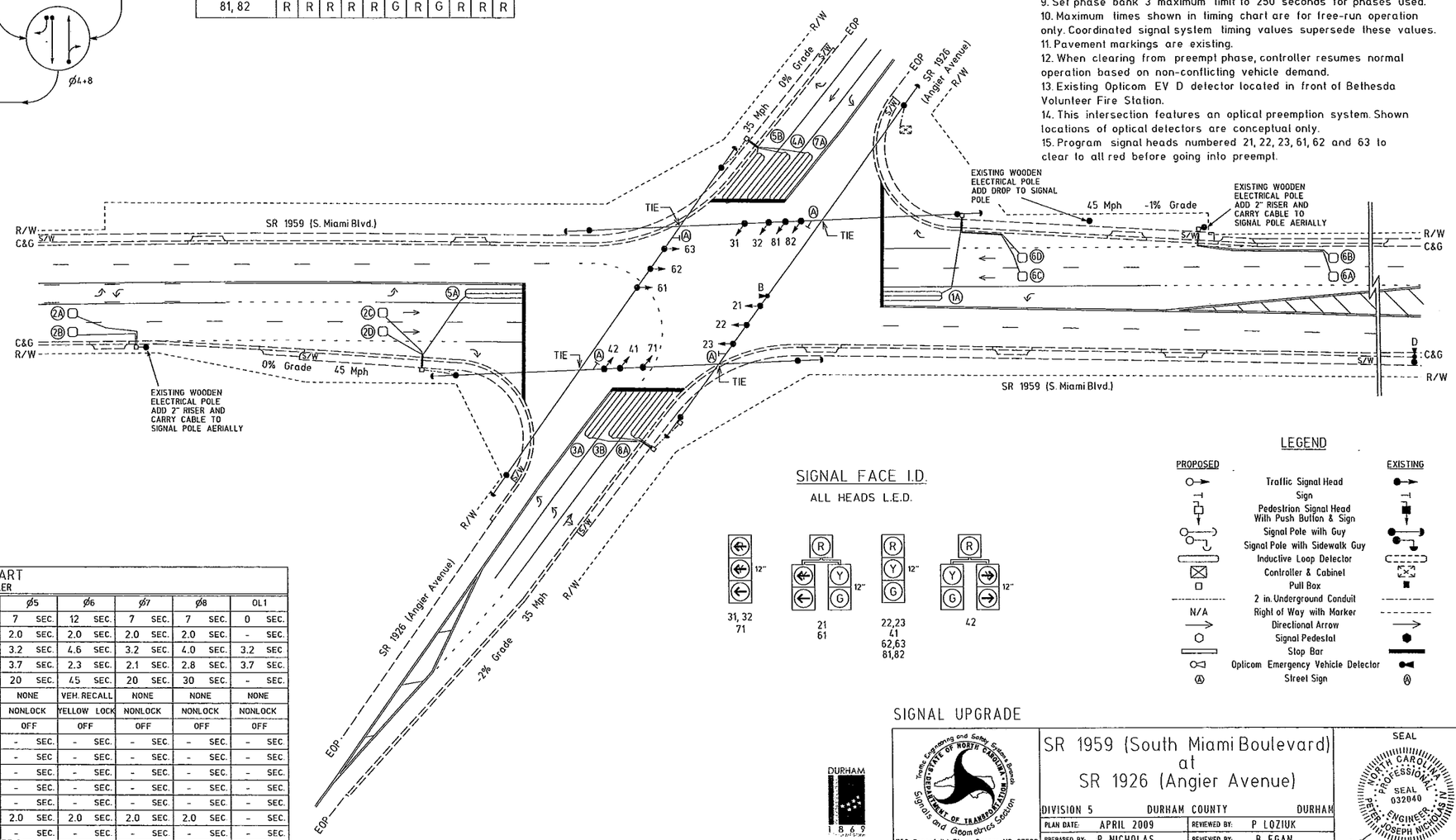

EV PREEMPTION

EV PREEMPTOR	EVB	EVD
FUNCTION	SECONDS	SECONDS
DELAY BEFORE PREEMPT	0	0
MIN. GREEN BEFORE PREEMPT	1.0	1.0
CLEARANCE TIME	20	20
PREEMPT EXTEND×	2.0	2.0

×Timing on optical detection unit

SIGNAL FACE I.D.

ALL HEADS L.E.D.

LEGEND

PROPOSED		EXISTING
	Traffic Signal Head	
	Sign	
	Pedestrian Signal Head With Push Button & Sign	
	Signal Pole with Guy	
	Signal Pole with Sidewalk Guy	
	Inductive Loop Detector	
	Controller & Cabinet	
	Pull Box	
	2 in. Underground Conduit	
N/A	Right of Way with Marker	
	Directional Arrow	
	Signal Pedestal	
	Stop Bar	
	Opticom Emergency Vehicle Detector	
	Street Sign	

TIMING CHART

170 CONTROLLER

PHASE	Ø1	Ø2	Ø3	Ø4	Ø5	Ø6	Ø7	Ø8	OL1
Minimum Initial ×	7 SEC.	12 SEC.	7 SEC.	7 SEC	7 SEC.	12 SEC.	7 SEC.	7 SEC.	0 SEC.
Vehicle Extension ×	2.0 SEC.	2.0 SEC.	2.0 SEC.	2.0 SEC	2.0 SEC.	2.0 SEC.	2.0 SEC.	2.0 SEC.	- SEC.
Yellow Change Int.	3.2 SEC.	4.5 SEC.	3.3 SEC.	3.8 SEC	3.2 SEC.	4.6 SEC.	3.2 SEC.	4.0 SEC.	3.2 SEC
Red Clearance	3.7 SEC.	2.4 SEC.	2.4 SEC.	2.9 SEC	3.7 SEC.	2.3 SEC.	2.1 SEC.	2.8 SEC.	3.7 SEC.
Maximum Limit ×	20 SEC.	45 SEC.	20 SEC.	30 SEC.	20 SEC.	45 SEC.	20 SEC.	30 SEC.	- SEC.
Recall Position	NONE	VEH. RECALL	NONE	NONE	NONE	VEH. RECALL	NONE	NONE	NONE
Vehicle Call Memory	NONLOCK	YELLOW LOCK	NONLOCK	NONLOCK	NONLOCK	YELLOW LOCK	NONLOCK	NONLOCK	NONLOCK
Double Entry	OFF	OFF	OFF	OFF	OFF	OFF	OFF	OFF	OFF
Walk ×	- SEC.	- SEC.	- SEC.	- SEC.	- SEC.	- SEC.	- SEC.	- SEC.	- SEC
Flashing Don't Walk	- SEC.	- SEC.	- SEC.	- SEC.	- SEC	- SEC.	- SEC.	- SEC.	- SEC
Type 3 Limit	- SEC.	- SEC.	- SEC.	- SEC.	- SEC.	- SEC.	- SEC.	- SEC.	- SEC.
Add Per Vehicle ×	- SEC.	- SEC	- SEC.	- SEC.	- SEC.	- SEC.	- SEC.	- SEC.	- SEC.
Maximum Initial ×	- SEC.	- SEC.	- SEC.	- SEC.	- SEC.	- SEC.	- SEC.	- SEC.	- SEC.
Maximum Gap ×	2.0 SEC.	2.0 SEC.	2.0 SEC.	2.0 SEC.	2.0 SEC.	2.0 SEC.	2.0 SEC.	2.0 SEC	- SEC.
Reduce 0.1 Sec Every ×	- SEC.	- SEC.	- SEC.	- SEC.	- SEC.	- SEC.	- SEC	- SEC.	- SEC.
Minimum Gap	2.0 SEC.	2.0 SEC.	2.0 SEC.	2.0 SEC.	2.0 SEC.	2.0 SEC.	2.0 SEC.	2.0 SEC.	- SEC.

× These values may be field adjusted. Do not adjust Min Green and Extension times for phases 2 and 6 lower than what is shown. Min Green for all other phases should not be lower than 4 seconds.

SIGNAL UPGRADE

DURHAM 1869

City of Durham
101 City Hall Plaza
Durham, NC 27701
(919) 560-4366

Traffic Engineering and Safety Systems Branch
STATE OF NORTH CAROLINA DEPARTMENT OF TRANSPORTATION
Signals and Geometrics Section
750 Greenfeild Pkwy, Garner, NC 27529

SCALE 0 40 1" = 40'

SR 1959 (South Miami Boulevard) at SR 1926 (Angier Avenue)

DIVISION 5 DURHAM COUNTY DURHAM

PLAN DATE:	APRIL 2009	REVIEWED BY:	P LOZIUK
PREPARED BY:	P NICHOLAS	REVIEWED BY:	B EGAN

REVISIONS	INIT.	DATE

SEAL
NORTH CAROLINA PROFESSIONAL SEAL 032040 ENGINEER PETER JOSEPH NICHOLAS, IV

SIGNATURE DATE 10-25-10

SIG. INVENTORY NO. 05-0394