ATTACHMENT A

AN ORDINANCE TO AMEND PROVISIONS OF THE UNIFIED DEVELOPMENT ORDINANCE REGULATING DESIGN DISTRICTS

WHEREAS, the Durham City Council wishes to amend a certain provision regarding Design Districts in the Unified Development Ordinance to better promote the community's health, safety, and welfare;

NOW, THEREFORE, be it ordained that Article 1, General, Article 2, Review Authority, Article 3, Applications and Permits, Article 4, Zoning Districts, Article 5, Use Regulations, Article 6, District Intensity Standards, Article 7, Design Standards, Article 9, Landscaping and Buffering, Article 10, Off-Street Parking and Loading, Article 11, Sign Standards, Article 13, Additional Requirements for Subdivisions, Article 14, Nonconformities, and Article 16, Definitions, are amended to make the following changes:

SECTION 1

Modify Article 1, General, Sec. 1.10, Transitional Provisions, paragraph 1.10.5, Zoning District Name Changes; Article 2, Review Authority, Sec. 2.7, Design District Review Team, paragraph 2.7.3, Powers and Duties, paragraph A, Review Authority, paragraph 1; Article 3, Applications and Permits, Sec. 3.11, Common Signage Plan, paragraph 3.11.3, Action by the Planning Director, paragraph A, and new Sec. 3.25, Design Special Use Permit, as set forth in the strikeouts and underlining below.

Sec. 1.10 Transitional Provisions

[Paragraphs 1.10.1 through 1.10.4 are omitted.]

1.10.5 Zoning District Name Changes

A. The zoning district names in effect prior to the effective date of this Ordinance are hereby converted, as shown on the following table.

PREVIOUS DISTRICT		NEW DISTRICT	
Residential Districts			
RD	Rural District	RR	Residential Rural
R-20 R-15, R-10 R-8	Residential 20 Residential 15, 10 Residential 8	RS-20 RS-10 RS-8	Residential Suburban – 20 Residential Suburban – 10 Residential Suburban – 8
RM-8, RM-12, RM-16	Residential Multifamily 8, 12, 16	RS-M	Residential Suburban Multifamily
R-5 R-3	Residential 5 Residential 3	RU-5 RU-5(2)	Residential Urban – 5 Residential Urban – 5(2)
RM-16, RM-20	Residential Multifamily 16, 20	RU-M	Residential Urban Multifamily
ITOD-CN RM-CN 40 RM-CN 60 RM-CN 80	Interim TOD Compact Neighborhood Residential Multifamily Compact Neighborhood 40, 60, 80	RC	Residential Compact
Nonresidential Districts			
--	--NEW--	CD	Compact Design
--	-- NEW --	CI	Commercial Infill
NC	Neighborhood Commercial	CN	Commercial Neighborhood

PREVIOUS DISTRICT		NEW DISTRICT	
O&I-1, O&I-2	Transitional Office and Institutional, General Office and Institutional	OI	Office and Institutional
GC	General Commercial	CG	Commercial General
CBD	Central Business District	DD	Downtown Design
RSCH, RAD	Research Park, Research Applications	SRP	Science Research Park
I-2 CT	Light Industrial Commercial Trade	IL	Industrial, Light
I-3	Heavy Industrial	I	Industrial
Planned Districts			
PDR	Planned Density Residential	PDR	Planned Development Residential
UC	University and College	UC	University and College
SC	Shopping Center	CC	Commercial Center
I-1	Industrial Park	IP	Industrial Park
MU	Mixed Use	MU	Mixed Use
Overlay Districts			
--	-- NEW --	-P	Neighborhood Protection Overlay
--	-- NEW --	-TO	Transitional Office Overlay
60 to 65 LDN Above 65 LDN	Airport Overlay	-A60 -A65	Airport Overlay
MTC	Major Transportation Corridor Overlay	-MTC	Major Transportation Corridor Overlay
-H	Historic District Overlay	-H	Historic Districts & Landmarks Overlay
Watershed Protection Overlay			
M/LR-A, -B F/J-A, -B E-A, -B	Lake Michie/Little River District Falls/Jordan District Eno River District	M/LR-A, -B F/J-A, -B E-A, -B	Lake Michie/Little River District Falls/Jordan District Eno River District

[Paragraphs B and C are omitted.]

Sec. 2.7 Design District Review Team

[Paragraphs 2.7.1 through 2.7.2 and 2.7.4 are omitted.]

2.7.3 Powers and Duties

The DDRT shall have the following powers and duties:

A. Review Authority

1. The DDRT shall be responsible for reviewing and making recommendations to the approving authority on ~~regarding proposals for~~ site plans ~~review approval in the DD District,~~ within the Transitional Use Area of the UC District~~,~~ and any Overlay established pursuant to Sec. 4.6, Neighborhood Protection Overlay, ~~and any other design districts~~ to assure compliance with all applicable design guidelines.

[Paragraphs 2-4 are omitted.]

[Paragraph B is omitted.]

Sec. 3.11 Common Signage Plan

[Paragraphs 3.11.1, 3.11.2, 3.11.4, and 3.11.5 are omitted.]

3.11.3 Action by the Planning Director

A. Upon hearing a recommendation from the Inspections Director, or designee, and the DDRT for signs within the ~~Downtown and~~ Compact Neighborhood Tier~~s~~ or in the MU District, the Planning Director, or designee, shall approve the common signage plan provided the plan meets all the requirements of this section.

[Paragraphs B and C are omitted.]

Sec. 3.25 Design Special Use Permit (DSUP)

3.25.1 Requirements

A Design Special Use Permit shall be required for site plans and architectural reviews where alternative forms of compliance are sought.

3.25.2 Process

A. Projects requiring a DSUP shall be processed in accordance with the provisions of Sec. 3.9, Special Use Permit.

B. Alternative forms of compliance with the following standards may be approved through a minor special use permit issued in conformance with Sec. 3.9, Special Use Permit:

1. Building type and frontage type standards in paragraphs 6.12.2D.2-7.

2. Additional standards in paragraph 6.12.2E.

3. Architectural standards in paragraph 6.12.2F.

4. Streetscape standards in paragraph 6.12.2G.

5. Building placement standards in paragraph 6.12.3A.1 or 6.12.4A.1.

6. Height articulation standards in paragraph 6.12.3A.2.a or 6.12.4A.2.a.

3.25.3. Criteria for Approval

A. In order to approve a DSUP, the Board of Adjustment shall make the following findings:

1. The proposed alternative form of compliance shall yield an overall design that equals or exceeds the applicable standards;

2. The proposed alternative form of compliance shall comply with the following design principles:

(a) Generate street level activity with pedestrian oriented design on all street frontages.

(b) Create designs that complement the surrounding context.

(c) Relate to the human scale in site and building design.

(d) Incorporate sustainable design strategies.

(e) Protect and emphasize important views of notable buildings and sites.

(f) Design access and circulation systems to allow a wide range of efficient multi-modal movement options; and

3. Any other review factors which the approving authority considers to be appropriate to the property in question.

SECTION 2

Modify Article 4, Zoning Districts, Sec. 4.1, General, paragraph 4.1.1, Establishment of Districts, paragraph A, Table, and paragraph 4.1.2, Development Tier Map, paragraph A, paragraph 4; and Sec. 4.5, Design District Intent Statements, new paragraph 4.5.2, Compact Design (CD), as set forth in the strikeouts and underlining below.

Sec. 4.1 General

4.1.1 Establishment of Districts

A. The following zoning districts are hereby established, and are intended to implement the Comprehensive Plan. Each district is only appropriate in development tiers where it effectively implements the plan, as set forth below.

		Development Tier					
Symbol	**District**	**Rural**	**Suburban**	**Urban**	**Compact Neighborhood**	**Downtown**	***Former Districts***
Residential Districts							
RR	Residential Rural	✓	✓				*RD*
RS-20	Residential Suburban – 20	✓[1]	✓				*R-20*
RS-10	Residential Suburban – 10		✓				*R-10, R-15*
RS-8	Residential Suburban – 8		✓				*R-8*
RS-M	Residential Suburban Multifamily		✓				*RM-8, RM-12, RM-16*
RU-5	Residential Urban – 5			✓	✓[3]		*R-5*
RU-5(2)	Residential Urban – 5 (2) (duplexes allowed)			✓	✓[3]		*R-3*
RU-M	Residential Urban Multifamily			✓	✓[3]		*RM-16, RM-20*
RC	Residential Compact		✓[2]		✓		*ITOD-CN, RM-CN*
Nonresidential Districts							
CI	Commercial Infill			✓	✓		*--NEW--*
CN	Commercial Neighborhood	✓	✓	✓	✓		*NC*
OI	Office and Institutional	✓	✓	✓	✓		*O&I-1, O&I-2*
CG	Commercial General	✓	✓	✓	✓		*GC*
SRP	Science Research Park		✓				*RSCH, RAD*
IL	Industrial Light		✓	✓	✓		*I-2, CT*
I	Industrial	✓	✓	✓			*I-3*
Planned Districts							
PDR	Planned Development Residential		✓	✓			*PDR*
UC	University and College		✓	✓	✓		*UC*
CC	Commercial Center		✓	✓			*SC*
IP	Industrial Park		✓	✓			*I-1*
MU	Mixed Use		✓	✓	✓	✓	*MU*
Design Districts							
CD-C	Compact Design – Core				✓		*-- NEW --*
CD-S1	Compact Design – Support 1				✓		*-- NEW --*
CD-S2	Compact Design – Support 2				✓		*-- NEW --*
CD-P	Compact Design – Pedestrian Business				✓		*-- NEW --*

		Development Tier					
Symbol	**District**	**Rural**	**Suburban**	**Urban**	**Compact Neighborhood**	**Downtown**	***Former Districts***
DD-C	Downtown Design - Core					✓	*--NEW--*
DD-S1	Downtown Design - Support 1					✓	*--NEW--*
DD-S2	Downtown Design - Support 2					✓	*--NEW--*
Overlays							
-P	Neighborhood Protection Overlay	✓	✓	✓	✓	✓	*P*
-TO	Transitional Office Overlay		✓	✓			*TO*
-A60 -A65	Airport Overlay	✓	✓				*60 to 65 LDN* *Above 65 LDN*
-MTC	Major Transportation Corridor Overlay		✓	✓	✓		*MTC, I-540*
-H	Historic Districts & Landmarks Overlay	✓	✓	✓	✓	✓	*Historic District Overlay*
M/LR-A, -B F/J-A, -B E-A, -B	Watershed Protection Overlays Lake Michie/Little River District Falls/Jordan District Eno River District	 ✓ ✓ ✓	 ✓ ✓ ✓	 ✓ ✓			 *M/LR-A, -B* *F/J-A, -B* *E-A, -B*

[1] Within Rural Villages as designated in the Comprehensive Plan only
[2] Within Suburban Transit Areas as designated in the Comprehensive Plan only, using Support Area standards as defined in Sec. 6.5, Residential Compact (RC) Development Intensity.
[3] Applying the infill standards of Sec. 6.8, Infill Development in Residential Districts, only.

Commentary: *Downtown Design District Core, Support 1, and Support 2 are the only districts allowed in the Downtown Tier. Therefore the Downtown Tier boundary and the Downtown Design District boundary are the same.*

[Paragraph B is omitted.]

4.1.2 Development Tier Map

A. The Development Tier Map is intended to ensure that development reflects the character of the area within which it occurs and to minimize the cost of extending infrastructure into areas inappropriately. The tiers shown on the map shall function as overlays, establishing guidelines within which different development patterns, intensities, and densities shall be utilized. The development tiers shall include the following:
[Paragraphs 1 through 3 and 5 are omitted].

4. The Compact Neighborhood Tier – That area ~~within ½ mile of the identified sites of transit stations that is covered by Station Areas Plans~~near planned transit stations, within which development is intended to be transit-, bicycle- and pedestrian-oriented to enhance the street level experience and provide a mixture of goods and services~~ near transit stations~~. Auto-oriented and low intensity uses shall be discouraged.

[Paragraphs B through F are omitted.]

[Paragraphs 4.1.3 and 4.1.4 are omitted.]

Sec. 4.5 Design District Intent Statements

Development guidelines for all design districts may be found in Sec 6.12, Design Districts.

[Paragraph 4.5.1 is omitted.]

4.5.2 Compact Design (CD)

The Compact Design (CD) District is intended to encourage development of appropriate urban intensity and pedestrian activity by focusing on the form of development and how it shapes the streetscape. The CD District includes the dense core surrounding the future transit station area as well as adjacent areas that provide a transition from the dense core to less intense, surrounding areas.

SECTION 3

Modify Article 5, Use Regulations, Sec. 5.1, Use Table, paragraph 5.1.2, Use Table; Sec. 5.2, Use Categories, paragraph 5.2.5, Commercial Use Categories, paragraph F, Retail Sales and Service; Sec. 5.3, Limited Use Standards, paragraph 5.3.3, Public and Civic Use Standards, paragraph C, Club or Lodge (Non-profit), paragraph 4 and new paragraph 5, paragraph E, Day Care Facility, paragraph 3, paragraph a, Outdoor Play Space, paragraphs 3 and 4, paragraph G, Museum, new paragraph 2, paragraph H, Parks and Open Areas, paragraph 1, Vehicle Use Area Landscaping Standards, and paragraph 2, Setbacks, paragraphs a and b, new paragraph I, Passenger Terminals, including paragraph 1, and renumber paragraphs I through M, paragraph 5.3.4, Commercial Use Standards, paragraph F, Commercial Parking, paragraph 1 and new paragraphs 2 and 3 and new commentary, paragraph G, Convenience Stores with Gas Sales, paragraph 5 and new paragraph 6, paragraph M, Hotels, Motels, and Extended Stay Residences, paragraphs 6, 7, and new paragraph 8, paragraph O, Nightclubs or Bars, new paragraph 4, paragraph P, Outdoor Recreation, paragraphs 1, 2, and 3, new paragraph T, Payday Lenders, including paragraph 1, and renumber paragraphs T and U, and paragraph U, Veterinary Clinics, Animals Hospitals, and Kennels, paragraph 1 and new paragraph 4, and paragraph 5.3.6, Industrial Use Standards, new paragraph E, Research and Development, including paragraph 1; and Sec. 5.4, Accessory Uses and Structures, paragraph 5.4.1, Accessory Structures, paragraph F, as set forth in the strikeouts and underlining below.

Sec. 5.1 Use Table

[Paragraph 5.1.1 is omitted.]

5.1.2 Use Table

		RESIDENTIAL						NONRESIDENTIAL							PLANNED					DESIGN		
USE CATEGORY	**SPECIFIC USE**	**RR**	**RS**	**RS-M**	**RU**	**RU-M**	**RC**	**CI**	**CN**	**OI**	**CG**	**SRP**	**IL**	**I**	**PDR**	**UC**	**CC**	**IP**	**MU**	**DD**	**CD**	**NOTES:**
AGRICULTURAL USES (City Only)																						
Agriculture	All agriculture, except as listed below	P	L																			5.3.1A
	Forestry	L	L	L	L	L	L	L	L	L	L	L	L	L	L	L	L	L	L	L	L	5.3.1B
RESIDENTIAL USES																						
Household Living	Single-family detached	L	L	L	L	L	L		L						‡		‡L		‡			6.2.1, 6.3.2, 6.4.2, 6.5.2, 6.10.2, 7.1.2
	Zero lot line, patio home		L	L	L	L	L								‡				‡			6.3.2, 6.4.2, 6.5.2, 6.10.2, 7.1.3, 7.1.5
	Traditional house				L	L	L								‡							6.4.2, 6.5.2, 7.1.4
	Semi-attached house		L	L	L	L	L								‡							6.3.2, 6.4.2, 6.5.2, 7.1.6
	Duplex			L	L	L	L								‡				‡	L		6.3.2, 6.4.2, 6.5.2, 6.10.2, 6.12.2D, 7.1.7
	Townhouse			L	L	L	L	L	L	L					‡				‡	L	L	6.3.2, 6.4.2, 6.5.2, 6.10.2, 6.12.2D, 7.1.8
	Multiplex / apartment			L		L	L		L	L	L				‡		‡L		‡	L	L	6.3.2, 6.4.2, 6.5.2, 6.10.2, 6.12.2D, 7.1.9, 7.1.10
	Family care home	L	L	L	L	L	L				L				‡				‡	L	L	6.2.1, 6.3.2, 6.4.2, 6.5.2, 6.10.2, 6.12.2D, 7.1.2

		RESIDENTIAL						NONRESIDENTIAL							PLANNED					DESIGN		
USE CATEGORY	**SPECIFIC USE**	**RR**	**RS**	**RS-M**	**RU**	**RU-M**	**RC**	**CI**	**CN**	**OI**	**CG**	**SRP**	**IL**	**I**	**PDR**	**UC**	**CC**	**IP**	**MU**	**DD**	**CD**	**NOTES:**
Household Living	Manufactured Home	L																				5.3.2D
	Manufactured home park or subdivision														‡L							5.3.2E
	Upper-story Residential							L	L	L	L				‡		‡L		‡	P	P	6.10.2
Group Living	All group living, except as listed below			m	m	m	m	M	m		m				‡				‡	m		
	Commercial dorm			L/m		L/m	L/m	L / m	L/m		L/m					‡L				L	L/m	5.3.2A
	Congregate living facility			L/m	L/m	L/m	L/m	L	L	L	L				‡L				‡L	L	L	5.3.2B
	Group home		L/m	L/m	L/m	L/m	L/m	L	L	L	L				‡L				‡L	L	L	5.3.2C
PUBLIC AND CIVIC USES																						
Community Service	All community service, except as listed below	P	P	P	P	P	P	P	P	P	P				‡		‡		‡	P	P	
	Auditoriums									L	L	L				‡L	‡L		‡L	P		5.3.3A
	Clubs and lodges	m	m	m	m	m	m	L	L	L	L	L	L		‡m		‡L	‡L	‡	L	L	5.3.3C
	Museums	L/m	L/m	L/m	L/m	L/m	L/m	L / m	L/m	L	L					‡L	‡L		‡L	L	L	5.3.3G
Day Care	Day Care Home	P	P	P	P	P	P	P	P	P	P	P	P		‡	‡	‡		‡	P	P	
	Day Care Facility	L/m	L/m	L/m	L/m	L/m	L/m	L	L	L	L	L	L		‡L	L	‡L		‡L	L	L	5.3.3E
Educational Facilities	School, Elementary	L/m	L/m	L/m	L/m	L/m	L/m	P	P	P	P		P		‡L/m	‡	‡	‡	‡	P	P	5.3.3JK
	School, middle or high	L/m	L/m	L/m	L/m	L/m	L/m	P	P	P	P		P		‡L/m	‡	‡	‡	‡	P	P	
	Universities or Colleges		M	M	M	M	M	P		P	P	P	P		‡M	‡	‡	‡	‡	P	P	
	Vocational, trade or business schools							P		P	P	P	P				‡	‡	‡	P	P	
Government Facilities	All government facilities, except has listed below	L/m	L/m	L/m	L/m	L/m	L/m	P	L/m	P	P	P	P	P	‡L/m		‡	‡	‡	P	P	5.3.3F

		RESIDENTIAL						NONRESIDENTIAL							PLANNED					DESIGN		
USE CATEGORY	**SPECIFIC USE**	**RR**	**RS**	**RS-M**	**RU**	**RU-M**	**RC**	**CI**	**CN**	**OI**	**CG**	**SRP**	**IL**	**I**	**PDR**	**UC**	**CC**	**IP**	**MU**	**DD**	**CD**	**NOTES:**
	Correctional facilities												L/M	L/M			‡L/M	‡L/M		L/M		5.3.3D
Medical Facilities	All medical facilities, except as listed below							P	P	P	P		P				‡		‡	P	P	
	Hospitals							P		P	P		P			‡	‡		‡	P	P	
Parks and Open Areas	All parks and open areas, except as listed below	L	L	L	L	L	L	L	L	L	L	L	L	L	‡L	‡L	‡L	‡L	‡L	L	L	5.3.3H
	Cemeteries, mausoleums, columbaria, memorial gardens	P	P	P	P	P				P	P		P		‡		‡	‡	‡	L	L	5.3.3B
Passenger Terminals	All passenger terminals, except as listed below	M									M		M	M								
	Rail and Bus terminals				M	M	P		P	P	P	P	P			‡	‡	‡	‡	P	L	5.3.3I
Places of Worship	All places of worship	L/m	L/m	L/m	L/m	L/m	L/m	L	L	L	L		L		‡L/m	‡L	‡L	‡	‡L	L	L	5.3.3~~H~~I
Social Service Institutions	All social service institutions										M		M						‡M	M		
Utilities	Major utilities	L/m	L/m									L	L	L				‡L		m	M	5.3.3~~L~~M
	Minor utilities	L	L	L	L	L	L	L	L	L	L	L	L	L	‡L	‡L	‡L	‡L	‡L	P	P	
	TV/HDTV/AM/FM Broadcast Antennae	L										L	L	L				‡L		L/m		5.3.3~~K~~L
	Wireless Communication Facility, except as Listed Below	L/M[1]	L	L	L	L	L	L	L	L	L	L	L	L	‡L	‡L	‡L	‡L	‡L	L	L	5.3.3~~M~~N
	Wireless Communication Facility, Freestanding Nonconcealed	L/M[1]/m	L/m									L/m	L/m	L/m		‡L/m	‡L/m	‡L/M	‡L/m	L/m		5.3.3~~M~~N

		RESIDENTIAL						NONRESIDENTIAL							PLANNED					DESIGN		
USE CATEGORY	**SPECIFIC USE**	**RR**	**RS**	**RS-M**	**RU**	**RU-M**	**RC**	**CI**	**CN**	**OI**	**CG**	**SRP**	**IL**	**I**	**PDR**	**UC**	**CC**	**IP**	**MU**	**DD**	**CD**	**NOTES:**
COMMERCIAL USES																						
Indoor Recreation	All indoor recreation, except as listed below							P	P		P		P				‡	‡	‡	P	P	
	Adult establishment												L/m	L								5.3.4A
	Firing range, indoor										L		L	L			‡L					5.3.4J
	Nightclub or bar							L	L/m		L		L				‡L		‡L	L	L	5.3.4O
Outdoor Recreation	All outdoor recreation, except as listed below	L/m							L/m		L		L				‡L		‡		L	5.3.4P
	Campground, summer camp, RV camp	m																				
	Drive-in theatre										L/m		L/m									5.3.4H
	Firing range, outdoor, archery, skeet	L/M												L/M								5.3.4K
	Golf course, country club, swim club, tennis club	L	L	L	L	L					L				‡L	‡L		‡L	‡L			5.3.4L
	Marina, boating facility	M																				
	Paintball	L/m									L/m		L/m									5.3.4Q
	Stadium, arena									M			M			‡			‡M	M		
Overnight Accommodations	Hotel, motel, and extended stay residences							L		L	L		L			‡L	‡L	‡L	‡L	L	L	5.3.4M
	Bed and breakfast	L/m	L/m	L/m	L/m	L/m	L/m	L	L	L	L				‡L/m		‡L		‡L	L	L	5.3.4D
	Diet house								P	P	P						‡		‡	P	P	
Parking, Commercial	All commercial parking							L		L	L	P	L	P			‡		‡L	L	L	5.3.4F
Restaurants	All restaurants, except as listed below							P	P		P		P				‡	‡	‡	P	P	
	Drive-through facilities								L		L		L				‡L	‡L	‡L			5.3.4I

		RESIDENTIAL						NONRESIDENTIAL							PLANNED					DESIGN		
USE CATEGORY	**SPECIFIC USE**	**RR**	**RS**	**RS-M**	**RU**	**RU-M**	**RC**	**CI**	**CN**	**OI**	**CG**	**SRP**	**IL**	**I**	**PDR**	**UC**	**CC**	**IP**	**MU**	**DD**	**CD**	**NOTES:**
Retail Sales and Service	All retail sales and service, except as listed below							P	P		L		P			L	‡		‡	P	P	5.3.4B
	Antique shop	L						P	P		P		P				‡		‡	P	P	5.3.4C
	Art, music, dance, photographic studio or gallery							P	P	P	P		P				‡	‡	‡	P	P	
	Convenience store with gasoline sales								L		L		L				‡L		‡L	L	L	5.3.4G
	Drive-through facilities								L		L		L				‡L		‡L			5.3.4I
	Payday Lenders							P	P		L		P							P	L	5.3.4T
	Veterinary clinic, animal hospital, kennel	L						L	L	L	L		L	L			‡L	‡L	‡L	L	L	5.3.4V~~U~~
Self-Service Storage	All self-service storage										L		L	L				‡L	‡L	L		5.3.4R
Vehicle Sales and Service	Car wash										L		L	L			‡L	‡L				5.3.4E
	Manufactured home sales										L		L	L				‡L				5.3.4N
	Vehicle sales, leasing or rental										L		L	L			‡L	‡L		L		5.3.4S
	Vehicle service												L	L				‡L				5.3.4U~~T~~
	Vehicle service, limited							L	L/m		L		L	L			‡L	‡L	‡L			5.3.4U~~T~~
OFFICE																						
Office	All offices, except those listed below							P	P	P	P	P	P				‡	‡	‡	P	P	
	Conference center, retreat house	L/m						L		L	L	L					‡L	‡L	‡L	L	L	5.3.5A
	Drive-through facilities								L	L	L	L	L				‡L	‡L	‡L			5.3.4I

		RESIDENTIAL						NONRESIDENTIAL							PLANNED					DESIGN		
USE CATEGORY	**SPECIFIC USE**	**RR**	**RS**	**RS-M**	**RU**	**RU-M**	**RC**	**CI**	**CN**	**OI**	**CG**	**SRP**	**IL**	**I**	**PDR**	**UC**	**CC**	**IP**	**MU**	**DD**	**CD**	**NOTES:**
INDUSTRIAL USES																						
Heavy Industrial	All heavy industrial, except as listed below													P								
	Asphalt plant													L/M								5.3.6A
	Concrete manufacturing plant													L/M								5.3.6B
	Hazardous and low-level nuclear disposal and storage													L/M								5.3.6C
	Wrecking, junk, and salvage yards												L\m	L								5.3.6H
Light Industrial Service	All light industrial service, except as listed below												P	P				‡		L		5.3.6D
	Research and development											P	P	P				‡		P	L	5.3.6I
Resource Extraction	All resource extraction													L/M								5.3.6E
Warehouse and Freight Movement	All warehouse and freight movement												P	P				‡				
Waste-Related Service	All waste-related services, except as listed below													M								
	Recycling centers												M	M								
	Transfer stations													L								5.3.6F
Wholesale Trades	All wholesale trade										m		P	P				‡		L		5.3.6G

[1] If located within 300 feet of a designated North Carolina Scenic Byway

Sec. 5.2 Use Categories

5.2.5 Commercial Use Categories

F. Retail Sales and Service

Characteristics: Companies or individuals involved in the sale, lease or rental of new or used products, or providing personal services or repair to the general public.		
Principal Uses	**Accessory Uses**	**Uses Not included**
Sales-Oriented: Convenience store (with or without gas sales) Drive-through facility Store selling, leasing or renting consumer, house, and business goods including alcoholic beverages, antiques, appliances, art supplies, baked goods, bicycles, books, cameras, carpet and floor coverings, crafts, clothing, computers, dry goods, electronic equipment, fabric, flowers, furniture, garden supplies, gasoline, gifts, groceries, hardware, house improvement, household products, jewelry, medical supplies, musical instruments, outdoor farmers market, pets, pet supplies, pharmaceuticals, photo finishing, picture frames, plants, printed materials, produce, sporting goods, stationery, tobacco and related products, vehicle parts, and videos **Personal Service-Oriented:** Art, music, dance, or photographic gallery or studio Athletic, tennis, swim or health club Bulk mailing service Caterer not located in a restaurant Dry-cleaning or laundry drop-off facility, laundromat Funeral home or mortuary Hair, nail, tanning, massage therapy and personal care service Payday lenders or check cashing services Photocopy, blueprint, and quick-sign service Psychic or medium Security service Tailor, milliner, upholsterer Taxi dispatch center Taxidermist Veterinary clinic, animal hospital or kennel Urgent care or emergency medical office **Repair-Oriented:** Appliance, bicycle, canvas product, clock, computer, gun, jewelry, musical instrument, office equipment, radio, shoe, television or watch repair Locksmith	Ancillary indoor storage Associated offices Food preparation and dining area Manufacture or repackaging of goods for on-site sale Public recycling drop-off site Residential unit for security purposes (single unit) Storage of goods Car wash at a convenience store with gas sales	Adult videos (see Indoor Recreation) Any use that is potentially dangerous, noxious or offensive to neighboring uses in the district or those who pass on public ways by reason of smoke, odor, noise, glare, fumes, gas, vibration, threat of fire or explosion, emission of particulate matter, interference with radio, television reception, radiation or any other likely cause (see Heavy Industrial) Car wash, except at a convenience store with gas sales (see Vehicle Sales and Service) Crematorium (see Light Industrial) Food service contractor (see Light Industrial Service) Laundry or dry-cleaning plant (see Light Industrial Service) Repair or service of motor vehicles, motorcycles, RVs, boats, and light and medium trucks (see Vehicle Sales and Service) Restaurant (see Restaurants) Sale or rental of machinery, equipment, heavy trucks, building materials, special trade tools, welding supplies, machine parts, electrical supplies, janitorial supplies, restaurant equipment, and store fixtures (see Wholesale Trade)

Sec. 5.3 Limited Use Standards

These standards shall only apply to those districts and uses where the "L" is designated on the use table in Sec. 5.1, Use Table.

[Paragraphs 5.3.1, 5.3.2 and 5.3.5 are omitted.]

5.3.3 Public and Civic Use Standards

[Paragraphs A, B, D, F, and J through N are omitted.]

C. Club or Lodge (Non-profit)

Non-profit clubs or lodges shall be permitted in accordance with the use table in Sec. 5.1, Use Table, subject to the following:

1. All structures shall be located at least 30 feet from property lines. This distance may be reduced to 15 feet if a masonry wall at least six feet high is provided.

2. No outdoor public address systems shall be allowed.

3. Parking shall not be located in the area between the structure and the street, unless the lot is 2 acres or larger, in which case parking may be in the front of the buildings but not in any required street yard.

4. The requirements in ~~in~~ para~~p~~graphs 1 and 3 do not apply in the ~~D~~Design Districts, in which the structure and parking location requirements of ~~Sec.~~paragraphs 6.12.3A~~D~~.1 and 6.12.4A.1, Building Placement, and ~~Sec.~~paragraph 10.4.1A.3~~4~~, Compact Neighborhood and Downtown Tiers, apply instead.

5. Clubs and Lodges shall not be permitted in the S2 sub-district of the CD District.

E. Day Care Facility

Day care facilities shall be permitted in accordance with the use table in Sec. 5.1, Use Table, subject to the following:

[Paragraphs 1 and 2 are omitted.]

3. The facility shall meet the following space requirements if children are the primary clients of the use:

a. Outdoor Play Space

[Paragraphs (1) and (2) are omitted.]

(3) Outdoor play areas shall be fenced in accordance with the standards for fences and walls found in Sec. 9.9, Fences and Walls, with a minimum fence height of four feet. ~~Play areas shall be located within the side or rear yard, unless the Development Review Board finds that outdoor play space within the area between the front of the structure and the street is safe, not detrimental to the neighborhood, accessible, and compatible with surrounding properties.~~

~~(4) The location requirements in paragraph 3 does not apply in the DD District. Instead, an outdoor play space in the DD District shall not be located in the street yard.~~

(4) Play areas shall be located within the side and/or rear yard except as follows: In all districts, except Design Districts, outdoor play space within the area between the front of the structure and the street may be permitted if findings are made by the approving authority that the outdoor play space is safe, not detrimental to the neighborhood, accessible, and compatible with surrounding properties in this location.

[Paragraph 4 is omitted.]

G. Museum

Museums shall be permitted in accordance with the use table in Sec. 5.1, Use Table, subject to the following:

1. The site shall have direct access from a street which is adequately sized to accommodate traffic generated by the museum.

2. Museums shall not be permitted in the S2 sub-district of the CD District.

H. Parks and Open Areas

Parks and open areas shall be permitted in accordance with the use table in Sec. 5.1, Use Table, subject to the following:

1. Vehicle Use Area Landscaping Standards

On sites greater than two acres, the shrub requirements of ~~Sec.~~paragraph 9.8.3B.3, Shrubs, and paragraph 9.8.2B, Vehicular Use Areas Visible from Adjacent Property, shall not apply if the vehicle use areas are located 100 feet or more from property lines, and at least 25% of the total site area is left in natural vegetation. In addition, vehicle use area landscaping requirements on all sites may be considered for adjustment at time of site plan approval when site size, site orientation, natural features, adjacent uses, topography or public safety and welfare would warrant modifications to the requirements of Article 9, Landscaping and Buffering.

[Commentary is omitted.]

2. Setbacks

a. Except in Design Districts, ~~A~~a 50-foot setback shall~~ould~~ be maintained for all structures, picnic areas, playgrounds, and unlighted basketball courts and athletic fields from property lines adjacent to residentially zoned or used property; however, the approving authority may reduce setback requirements to no less than ten feet at the time of site plan approval when conditions warrant a reduction. Possible conditions include, but are not limited to, building orientation, topography, distance to off site improvements, physical obstructions, developability of the park site or developability of the adjacent site, or natural features. In Design Districts, a 15-foot setback shall be maintained instead of the build-to line in paragraphs 6.12.3A.1 and 6.12.4A.1, Building Placement.

b. Except in Design Districts, ~~L~~lighted facilities (such as tennis courts, ball fields, basketball courts) shall maintain a 100-foot setback from property lines adjacent to residentially zoned or used property. In Design Districts, a 30-foot setback shall be maintained instead of the build-to line in paragraphs 6.12.3A.1 and 6.12.4A.1, Building Placement. This setback may be reduced at time of site plan approval if the site plan depicts measures used to reduce light and glare onto adjacent residentially zoned or used property. Possible measures include, but are not limited to directional lighting, lower fixture heights, berms, vegetation, and fences. In addition, the site plan shall include documentation from a registered professional with experience in lighting certifying that the lighting does

not exceed 0.5 foot-candle at the property line of adjacent residentially zoned or used properties.

I. Passenger Terminals

Passenger terminals shall be permitted in accordance with the use table in Sec. 5.1, Use Table, subject to the following:

1. Passenger terminals shall not be permitted in the S2 sub-district of the CD District.

[Paragraphs 5.3.3I through 5.3.3M are renumbered as 5.3.3J through 5.3.3N.]

5.3.4 Commercial Use Standards

[Paragraphs A through E, H through L, N, and P through T are omitted.]

F. Commercial Parking

Commercial parking shall be permitted in accordance with the use table in Sec. 5.1, Use Table, subject to the following:

1. Commercial parking in the Downtown and Compact Neighborhood Tiers adjoining single-family residential development shall require installation of a wall a minimum of~~at least~~ six feet in height along each property line adjacent to residential development pursuant to Sec. 9.9, Fences and Walls.

2. Commercial parking shall not be permitted in the S2 sub-district of the CD District.

3. Commercial parking shall only be permitted in the P sub-district of the CD District if buildings surround the parking area so that it is not visible from the public or private right-of-way or adjacent property.

Commentary: *Parking areas will not be considered visible if they can only be seen by looking along driveways.*

G. Convenience Stores with Gas Sales

Convenience stores with gas sales shall be permitted in accordance with the use table in Sec. 5.1, Use Table, subject to the following:

[Paragraphs 1 through 4 are omitted.]

5. Within the CN District and the ~~Downtown Tier~~Design Districts, the maximum number of fueling stations shall be limited to eight.

6. Within the S1 and S2 sub-districts of the CD Districts, Convenience Stores with Gas Sales shall not be permitted.

M. Hotels, Motels, and Extended Stay Residences

Hotels, motels, and extended stay residences shall be permitted in accordance with the use table in Sec. 5.1, Use Table, subject to the following:

1. A minor special use permit shall be required if any access to a hotel, motel, or extended stay residence is through or adjacent to (including directly across a public right-of-way) a residential district or use, unless such access is consistent with an approved development plan that accurately specifies the type, size, and intensity of use.

2. All hotel, motel, and extended stay residence buildings and vehicular use areas shall be located at least 50 feet from any property line adjacent to a residential district or use.

3. Any accessory commercial activities such as restaurants shall not be located along the side of the property adjacent to a residential district or use.

4. Any outdoor recreation facilities, such as swimming pools, shall not be located along the side of the property adjacent to a residential district or use. If the outdoor recreation facility is a swimming pool, it shall meet the standards of Sec. 5.4.9, Swimming Pools, with regard to fencing.

5. A minor special use permit shall be required if the property line of a hotel, motel, or extended stay residence is 200 feet or less from a residential district or the property line of a single-family residential use, unless such location is consistent with an approved development plan that accurately specifies the type, size and intensity of use.

6. In the Design Districts, ~~T~~the requirements in paragraphs 1 and 5 ~~do~~shall not apply ~~in the DD District~~. Instead, a minor special use permit shall be required if ~~the~~a hotel, motel, or extended stay residence~~t~~ is located in the ~~DD~~ S2 sub-district of the DD District. This use shall not be permitted in the S2 sub-district of the CD District.

7. In the Design Districts, ~~T~~the requirements in paragraphs 2, 3, and 4 shall apply ~~in the DD District~~ only ~~when the~~if a hotel, motel, or extended stay residence is adjacent to a residential district.

8. In the CD District, a six-foot-high masonry wall shall be provided along the entire property line between any outdoor recreation facility or vehicular use area and an adjacent pre-existing residential use at ground level.

O. Nightclubs or Bars

Nightclubs or bars shall be permitted in accordance with the use table in Sec. 5.1, Use Table, subject to the following:

[Paragraphs 1 and 2 are omitted.]

3. Nightclubs or bars in the DD-S2 District shall be located 50 feet or more from any residential zoning district outside of the Downtown Tier. Measurements shall be made from the residential district boundary to the point on the proposed nightclub or bar, whether on the building or associated parking area, that is closest to the residential district boundary.

4. Nightclubs and bars shall not be permitted in the S2 sub-district of the CD District.

P. Outdoor Recreation

Outdoor recreation activities shall be permitted in accordance with the use table in Sec. 5.1, Use Table, subject to the following:

1. If not otherwise required, a minor special use permit shall be required if any access to the site is through or adjacent to (including directly across a public right-of-way) a residential district or use, unless such access is consistent with an approved development plan that accurately specifies the type, size, and

intensity of use. This requirement shall apply in the CD District only if access is through or adjacent to a residential district.

2. Except in the CD District, a~~A~~ 50-foot setback from any property line adjacent to a residential district or use shall be maintained for any unlighted structure, food sale or dining area, playground, viewing area, court, field, or other athletic or entertainment area or facility. In the CD District, a 15 foot setback shall be maintained instead of the build-to line in paragraphs 6.12.3A.1 and 6.12.4A.1, Building Placement.

3. Except in the CD District, a~~A~~ 100-foot setback from any property line adjacent to a residential district or use shall be maintained for any lighted structure, food sale or dining area, playground, viewing area, court, field, or other athletic or entertainment area or facility. In the CD District, a 30 foot setback shall be maintained instead of the build-to line in paragraphs 6.12.3A.1 and 6.12.4A.1, Building Placement. In addition, the site plan shall include documentation by a registered professional with experience in lighting certifying that the lighting does not exceed 0.5 foot-candle at the property line of any adjacent residential district or use.

4. Food sales shall be provided for patrons of the recreational activity only.

T. Payday Lenders

Payday lenders shall be permitted in accordance with the use table in Sec. 5.1, Use Table, subject to the following:

1. Within the S1 and S2 sub-districts of the CD Districts, payday lenders shall not be permitted.

[Paragraphs 5.3.4T and 5.3.4U are renumbered as 5.3.4U through 5.3.4V.]

V~~U~~. Veterinary Clinics, Animal Hospitals, and Kennels

Veterinary clinics, animal hospitals, and kennels shall be permitted in accordance with the use table in Sec. 5.1, Use Table, subject to the following:

1. No outdoor runs, kennels or storage shall be allowed in ~~the D~~Design Districts.

[Paragraphs 2 and 3 are omitted.]

4. Within the S1 and S2 sub-districts of the CD Districts, Veterinary Clinics, Animal Hospitals, and Kennels shall not be permitted.

5.3.6 Industrial Use Standards

E. Research and Development

Research and development shall be permitted in accordance with the use table in Sec. 5.1, Use Table, subject to the following:

1. Research and development shall not be permitted in the S2 sub-district of the CD District.

Sec. 5.4 Accessory Uses and Structures

5.4.1 Accessory Structures

[Paragraphs A through E are omitted.]

F. In addition to the requirements in paragraphs A, B, C, and E, accessory structures in ~~the D~~Design Districts shall comply with the following standards:

1. The height of the structure shall not exceed 35 feet and shall not exceed the primary structure in height; and

2. The structure shall be compatible with the primary structure in style, materials, roof form, and details.

[Paragraphs 5.4.2 through 5.4.12 are omitted.]

SECTION 4

Modify Article 6, District Intensity Standards, Sec. 6.9, Nonresidential Development in Residential Districts, paragraph 6.9.1, Dimensional Standards, paragraph A; and Sec. 6.10, Nonresidential District Development Intensity, paragraph 6.10.1, Nonresidential Development Standards, paragraph D, Compact Neighborhood Tier, and paragraph E, Street Yard Variations, paragraphs 3, 4 and 5, as set forth in the strikeouts and underlining below.

Sec. 6.9 Nonresidential Development in Residential Districts

6.9.1 Dimensional Standards

A. Nonresidential development in residential districts shall comply with the dimensional standards in the following table:

	RURAL		SUBURBAN		URBAN		COMPACT	
Development Standard	**Min.**	**Max.**	**Min.**	**Max.**	**Min.**	**Max.**	**Min.**	**Max.**
Lot Area (square feet)	3 ac.	---	15,000	---	5,000	---	5,000	---
Lot Width (feet)	100	---	90	--	50	---	50	---
Open Space (% of gross area) [1,2]	---	---	10	---	3	---	---	---
~~Downtown~~	~~—~~	~~—~~	~~—~~	~~—~~	~~—~~	~~—~~	~~1.0~~	~~—~~
Core Area	---	---	---	---	---	---	1.0	---
Support Area	---	---	---	---	---	---	3.0	---
Street Yard								
Feet from ROW	50	---	25	---		20[2]		15[2]
% of Frontage	---	---	---	---	60	---	80	---
Side Yard (feet)								
Min Each Side	12	---	10	---	6	---	0	---
Min Both Sides (total)	30	---	24	---	15	---	0	---
Rear Yard (feet)	25	---	25	---	25	---	25	---
Building Coverage (%)[3]	--	9	---	60	---	70	---	70
Height (feet)	---	45	---	45	---	45	---	45

[1]Usuable open space is not required for nonresidential development in residential districts, per paragraph 7.2.5A.
[2]Street yard may be modified subject to paragraph 6.8.3A, Street Yards.
[3]May be further restricted by watershed regulations in accordance with paragraph 8.7.2B, Impervious Surface Limits.

Principal uses listed in paragraph 5.2.4F, Park s and Open Areas, and paragraph 5.2.4J, Utilities, are exempt from the open space requirements in the table above.

[Paragraphs B and C are omitted.]

[Paragraphs 6.9.2 and 6.9.3 are omitted.]

Sec. 6.10 Nonresidential District Development Intensity

6.10.1 Nonresidential Development Standards

[Paragraphs A through C are omitted.]

D. Compact Neighborhood Tier

All nonresidential development in the Compact Neighborhood Tier as designated in the Comprehensive Plan, except development within CD Districts, shall comply with the standards in the tables below:

[Tables are omitted.]

E. Street Yard Variations

A new structure or modifications to an existing structure shall not be required to conform to the minimum street yard requirements of the district in the following circumstances:

1. Where 50% or more of the lots on the same linear block as the lot in question are developed with less than the required street yard, the average setback of the buildings on the developed lots on the block with less than the required street yard shall be observed as the minimum setback for a new structure;

2. Where the lot on which the new structure is proposed is between two adjacent existing developed lots with less than the required street yard, the average setback of the buildings of both adjacent lots shall be observed as the minimum street yard;

3. Where a linear block of less than 500 feet is split into more than one zoning district, the zoning district with the most frontage shall determine the minimum street yard setback. However, this provision shall not apply if the street right-of-way is less than 50 feet wide and property on the opposite side of the street is residentially used or zoned, in which case the provisions of paragraph~~Sec.~~ 6.8.3A, Street Yards, shall be applied;

4. In the Urban and Compact Neighborhood Tiers, except within CD Districts, where a lot has multiple frontages, the Planning Director, or designee, shall determine the most significant street frontage and apply the required street yard to that frontage, permitting greater setbacks on other frontages; or

5. In the Urban and Compact Neighborhood Tiers, except within CD Districts, to accommodate the location of those limited vehicular-dependent uses (such as, but not limited to, convenience stores with gas sales, automobile sales, and service) that are allowed in these tiers, or if the design requirements of paragraph~~Sec.~~ 10.4.1A, Location of Parking, are satisfied.

SECTION 5

Modify Article 6, District Intensity Standards, Sec. 6.12, Design Districts, paragraph 6.12.2, All Design Districts, paragraph A, General, paragraph 2, new paragraphs 3 through 5, and commentary, paragraph B, Sub-districts of Design Districts, paragraph 4, Special Sub-districts, new paragraph a, Pedestrian Business Sub-district (Ninth Street), paragraph C, Height Articulation, paragraph 1, Building Height to Street Width Ratio, and paragraph 2, Upper Story Building Step-backs, paragraph D, Frontage and Building Types, including new paragraph 1, Permitted Frontage and Building Types, renumber as paragraph 2, Storefront Frontage Type,

paragraph b, Building Standards, paragraphs (2), (4), (6), and (7), renumber as paragraph 3, Arcade Frontage Type, paragraph a, Description, and paragraph b, Building Standards, paragraphs (1), (2), (4), and (5), renumber as paragraph 4, Courtyard Frontage Type, paragraph a, Description, paragraph b, Building Standards, table, paragraphs (1) and (2), and new diagram, renumber as paragraph 5, Forecourt Frontage Type, paragraph b, Building Standards, paragraphs (1) and (3), and paragraph (4), Forecourt Sub-types, paragraphs (a) through (c), renumber as paragraph 6, Parking Structure Frontage Type, paragraph b, Building Standards, paragraph (2), new paragraph (3), paragraph (5) including new paragraphs (a) through (d) with new commentary, and renumber paragraph (3) as paragraph (2), renumber as paragraph 7, Monumental Building Type, paragraph b, Qualifying Uses, paragraph (2) including paragraphs (a) and (b), paragraph c, Building Standards, paragraphs (3) through (6) including paragraphs (a) through (h), paragraph (7) including new paragraphs (a) through (e), and paragraph (8), and new paragraph d, Front Facade Street Yard Standards, including paragraphs (1), (2), (3) including paragraphs (a) through (d), and (4) including paragraphs (a) and (b), new paragraph E, Additional Standards, including paragraph 1, Pedestrian Mall Standards, including paragraphs a through g, and paragraph 2, Parking and Services, including paragraphs a through c, new paragraph F, Architectural Standards, including paragraph 1, Building Access and Pedestrian Connectivity, including paragraphs a through c with new commentary, and paragraph d including paragraphs (1) through (3), and paragraph 2, Fenestration Requirements, including paragraphs a through c, and d, Street Level Window Design Standards, including paragraphs (1) through (3), paragraph 3, Materials, including paragraphs a and b, and paragraph 4, Facades, including paragraph a, including paragraphs (1) through (3), and paragraphs b through f, new paragraph G, Streetscape Standards, including paragraph 1, Sidewalks, including paragraphs a and b, paragraph 2, Accessibility, including paragraphs a and b, paragraph 3, Streetscape Amenities, including paragraphs a through d, and new paragraph H, Additional Requirements, including paragraph 1, Vacant Lots, including paragraphs a through c, and paragraph 2, Temporary Pedestrian Paths and as set forth in the strikeouts and underlining below.

Sec. 6.12 Design Districts

6.12.1 Purpose

Design districts shall be established to regulate the physical form of specific areas within the community. They regulate the relationship between buildings and the streetscape by focusing on mass, scale, and character along the street. The emphasis is on appropriate building placement and massing rather than specific land uses. They are intended to encourage innovative projects that are integrated and compatible with nearby development.

6.12.2 All Design Districts

A. General

1. Design district uses shall be permitted in accordance with Sec. 5.1, Use Table.

2. Unless alternate standards are explicitly established in ~~this section~~Sec. 6.12, Design Districts, all standards and provisions of this Ordinance shall apply to development within any Design District. The requirements of ~~Sec.~~paragraph 6.12.2, All Design Districts, ~~are supplemented by~~shall be met in addition to

either the requirements of paragraph 6.12.3, Downtown Design (DD) District, or paragraph 6.12.4, Compact Design (CD) District.

3. If conflicts exist between the requirements of this section and other requirements contained in Article 6, District Intensity Standards, or Sec. 7.1, Housing Types, the requirements of this section shall apply.

4. Development in Design Districts shall conform to any applicable adopted Open Space or Gateway Plans.

5. Where a Design District is overlaid by a Historic District Overlay, the standards set forth in Sec. 4.10, Historic District Overlay, shall apply.

Commentary: *The elements described in ~~Sec.~~paragraph 6.12.2, All Design Districts, are the building blocks for the creation of new Design Districts. Design districts utilize sub-districts, height articulation, and building and frontage types.*

B. Sub-districts of Design Districts

In the creation of a Design District, any number of the following sub-districts shall be established and depicted on the Zoning Map for the specific Design District:

1. Core (C)

The portion of a Design District where the highest, densest urban development, with a mix of vertically integrated uses, is expected and encouraged.

2. Support 1 (S1)

The portion of a Design District where moderate intensity urban development creates a mixed use urban environment at a lesser scale that respects adjacent development.

3. Support 2 (S2)

The portion of a Design District intended to provide a sensitive transition from more intense development to development adjacent to the district, often residential in nature.

4. Special Sub-districts

Special sub-districts may be established as needed for any of the Design Districts. Specific standards for a special sub-district shall be contained in the standards for the Design District in which it is established.

a. Pedestrian Business Sub-district (Ninth Street)

The Pedestrian Business Sub-district (Ninth Street) (CD-P(N)), which is located in the Compact Design District that incorporates a portion of Ninth Street, is created to protect the character existing along the east side of Ninth Street within the district and to ensure that any new development on the west side of Ninth Street within the district is in keeping with that character.

C. Height Articulation

1. Building Height to Street Width Ratio

Ratios establish minimum and maximum required initial building heights (or podium heights) along the street frontage based on sub-district. Ratios shall be

provided as required by the corresponding Building Height and Massing table for each district. See paragraph 6.12.3A.2.a for the DD District and paragraph 6.12.4A.2.a for the CD District.

Commentary: *Urban design principles include both a minimum enclosure of the public realm for pedestrian-scaled development, and a maximum enclosure to ensure light and air access on the street. The minimum building height to street width ratios provide a minimum enclosure. The maximum building height to street width ratios and the upper story building step-backs provide a maximum enclosure.*

2. Upper Story Building Step-backs

Upper story building step-backs shall be provided as required by the corresponding Building Height and Massing table for each district. Step-backs shall apply until the final 25% of the site area is reached at which point the building can extend up without further step-backs until the maximum allowable height is reached. See paragraph 6.12.3A.2.a for the DD District and paragraph 6.12.4A.2.a for the CD District.

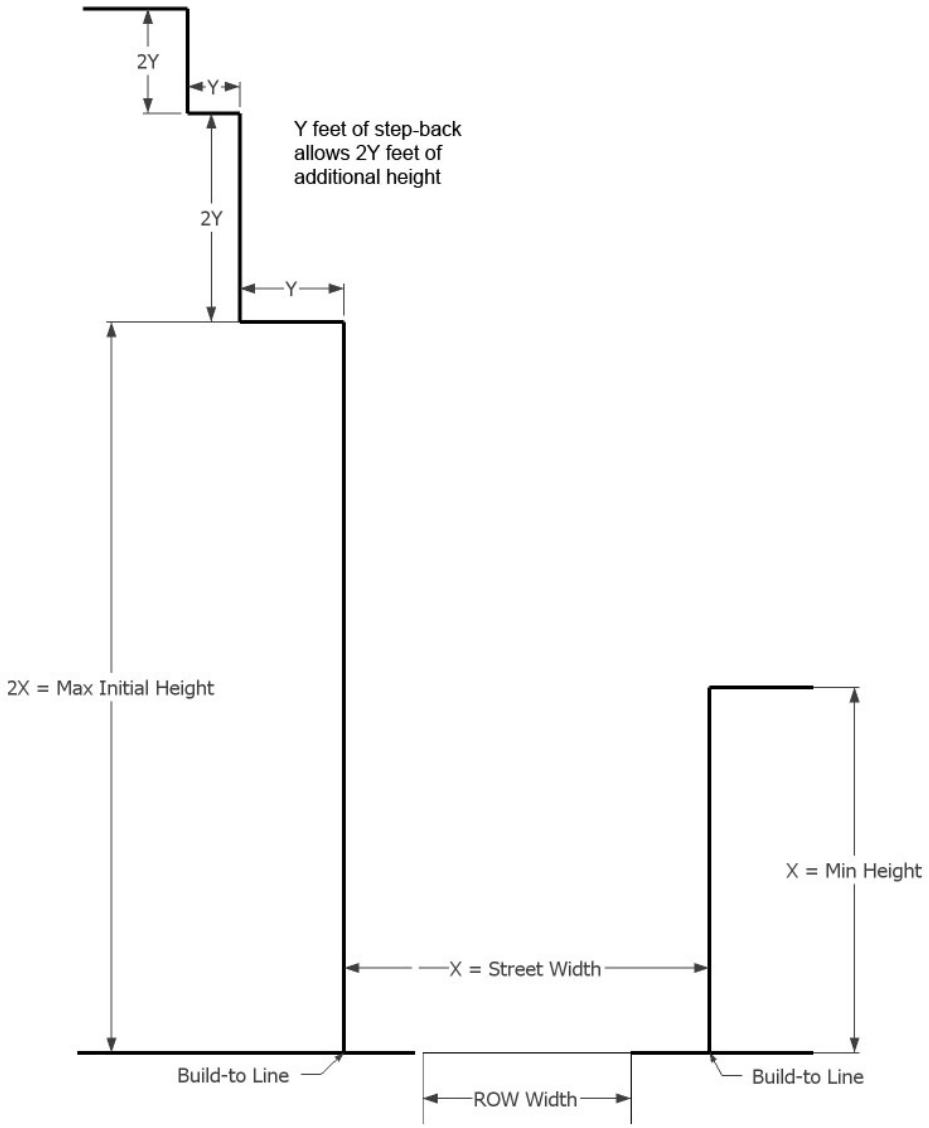

Downtown Design - Core Sub-district

Commentary: *In the DD-C sub-district, for X feet of street width, the maximum initial height is 2X. In this sub-district the minimum height is X. For every Y feet of step-back provided, 2Y feet of additional height shall be permitted up to the maximum allowable height in the sub-district. Multiple step-backs may be provided to reach the maximum height.*

D. Frontage and Building Types

Frontage Types define the interface of the development with the streetscape. They apply to all street facades and the adjoining streetscape, <u>including public and private streets and public access and common areas</u>, generally at ground level. Building Types regulate massing beyond just that along the street frontage. They include standards regarding all sides of the building. A building with multiple street frontages may employ different Frontage Types on its facades, but Building Types

cannot be combined. If a property has street frontage on all sides, a single street frontage can be designated as a service frontage and thereby be exempt from meeting all frontage type standards.

1. Permitted Frontage and Building Types[1]

Sub-district		Frontage or Building Type					
		Storefront	Arcade	Courtyard	Forecourt	Parking Structure	Monumental
Downtown Design	DD-C	✓	✓	✓	✓	✓	✓
	DD-S1	✓	✓	✓	✓	✓	✓
	DD-S2	✓	✓	✓	✓	--	✓
Compact Design	CD-C	✓	✓	✓	✓	✓	--
	CD-S1	✓	✓	✓	✓	--	✓
	CD-S2	✓	✓	✓	✓	--	✓
	CD-P	✓	✓	✓	--	--	--

[1]Permitted frontage and building types are indicated by a "✓" in the table above.

~~1~~2. Storefront Frontage Type

a. Description

A structure with facades placed at or close to the right-of-way line, with the entrance at sidewalk grade.

b. Building Standards

(1) ~~100~~80% of podium building facade shall be at the build-to line.

(2) The building mass shall be articulated as individual vertical bays, each a maximum of 50 feet in width with a storefront and an entrance.

(3) A storefront window system shall be used at the street level.

(4) A primary horizontal articulation shall be made between the ground floor and the upper floors that includes a change in material or change in plane.

(5) A secondary tripartite horizontal articulation shall be made within the ground floor facade (for example: kickplate, storefront, and transom).

(6) Primary ground floor ~~E~~entries shall be recessed so that any door in a fully opened position does not extend beyond the building facade.

(7) Recessed entries, required in paragraph 6 above, shall be proportionally wider (Y) than they are deep (X). The depth (X) of a recessed entry shall be a maximum of 1.5 times the width (Y) of the recessed entry.

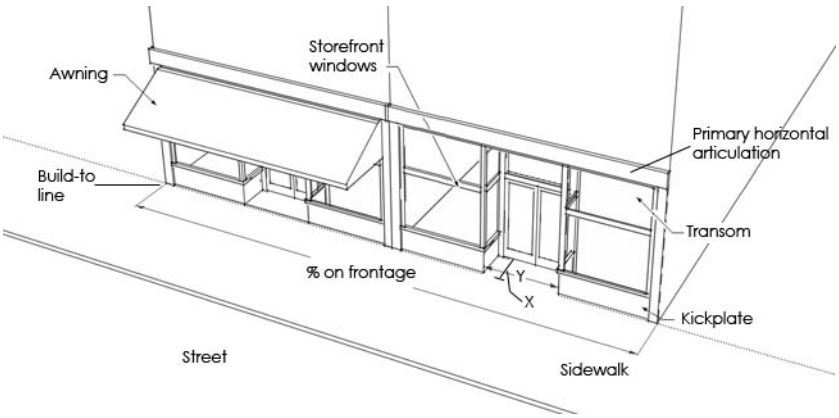

~~2~~3. Arcade Frontage Type

a. Description

A structure with a recessed street level facade that creates a linear passageway parallel to the street covered by the upper stories of the building, which extend to the build-to line and are supported by columns.

b. Building Standards

(1) ~~10~~80% of podium building facade shall be at the build-to line.

(2) The building shall have a ground floor storefront and entrance within each building bay. ~~A storefront window system shall be used at the street level.~~

(3) The depth (x) of the recessed street level, or arcade, shall be a minimum of 8 feet and a maximum of 20 feet, measured from the build-to line.

~~(4) Entries shall be at sidewalk level.~~

(~~5~~4) Columns shall be placed at the build-to line and their spacing shall, at a minimum, correspond to the vertical bay articulation along the frontage. Voids between columns shall not be permanently filled in.

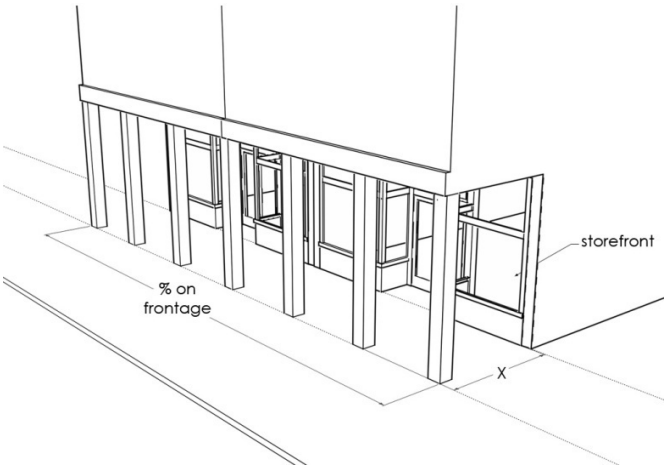

~~3~~4. Courtyard Frontage Type

a. Description

A structure with a full height recessed facade for a portion of the building frontage where the building(s) creates enclosure around an internal void~~creating~~ (such as a U or L shaped building footprint).

b. Building Standards

Requirement	Minimum	Maximum
Required street frontage of the lot (W)	100 feet	---
~~Percentage of facade~~ R~~r~~equired width (Z) at build-to line	20% of the building frontage or 30 feet, whichever is greater ~~50%~~	50% of the building frontage ~~70%~~
Required courtyard depth (Y)	~~20~~50% of courtyard width (Z) or 30 feet, whichever is greater	---
Required courtyard width to building height ratio (Z:X)	2:1~~1:2~~	1:2~~3:1~~
Required courtyard interval (defined as wing, courtyard opening, and wing)	___	200 feet

(1) Main entrances may be located in the courtyard instead of, or in addition to, entrances at the street and shall be spaced at a maximum of 150 foot intervals along the frontage.

(2) A minimum glazing of 30% shall apply to the courtyard facades, in addition to the building facade glazing requirements in ~~Sec.~~paragraph 6.12.2F.2~~3E.2~~, Fenestration Requirements.

(3) Courtyard voids shall not be placed on block corners.

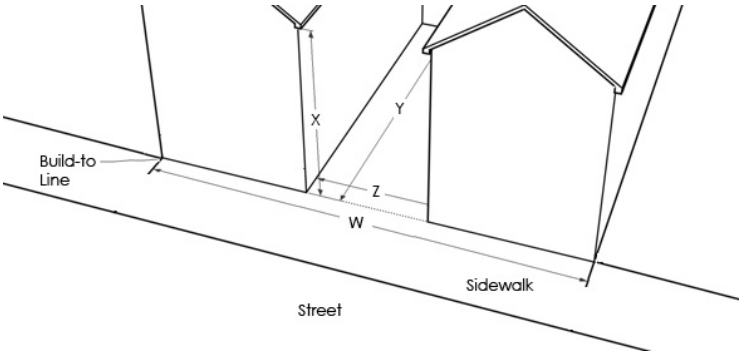

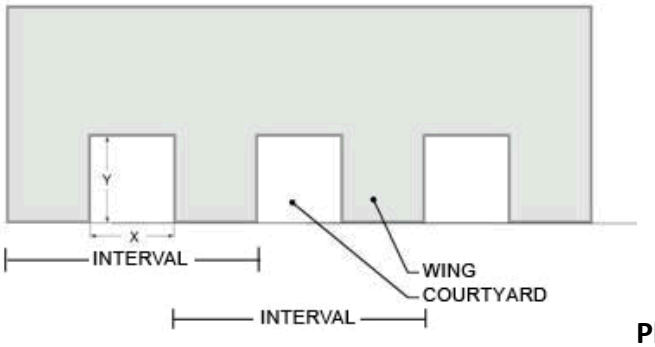

Plan View

4~~0~~5. Forecourt Frontage Type

a. Description

A structure with facades that are separated from the sidewalk by a small street yard either at grade (forecourt), above grade (raised court), below grade (lightcourt), or with a raised entry (stoop).

b. Building Standards

(1) The required street yard shall have a minimum depth of 5 feet and maximum depth of 15~~0~~ feet measured from the build-to line.

(2) A minimum of 60% of the podium building facade shall be located directly abutting the back of the street yard.

(3) A minimum 2 foot high fence or street wall is required ~~at~~within two feet in front of or behind the build-to line and must comply with the provisions of Sec. 9.9, Fences and Walls. This requirement shall only apply to street yards at grade (forecourt) for 60% of the street frontage.

Forecourt

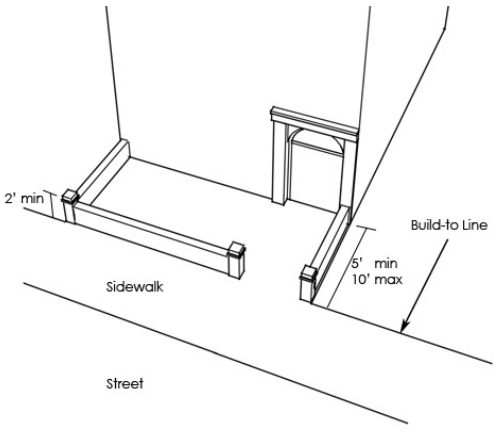

(4) Forecourt Sub-types

(a) A raised court type may be created when the ground level of the forecourt is raised above the adjacent street level. The raised court shall be a minimum of 30 inches <u>and a maximum of four feet</u> above grade level.

Raised Court

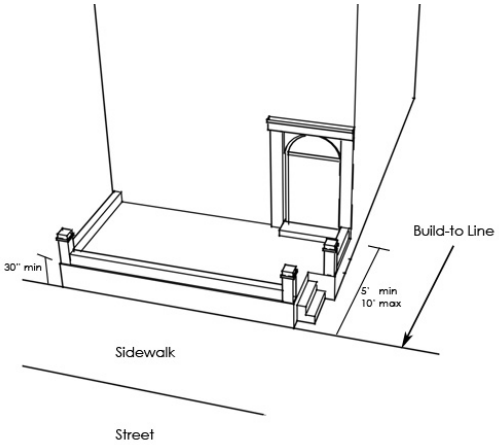

(b) A light_court type may be created when the ground level of the forecourt is lowered below the adjacent street level. The light_court shall be a usable space accessible from either the street <u>and/</u>or the building.

Light Court

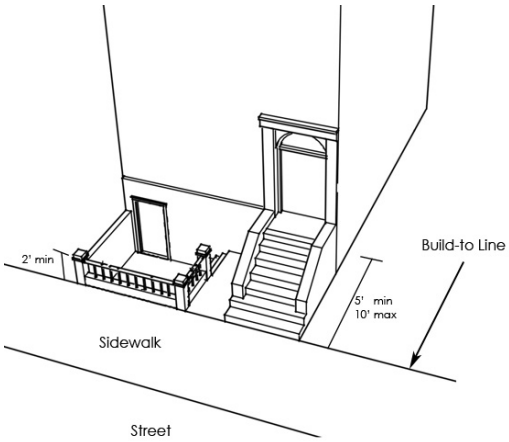

(c) A stoop type may be created when a minimum 20 square foot landing area raised a minimum of 30 inches and a maximum of six feet above the average grade at the street is provided that corresponds to building entries. ~~This type shall be exempt from the fencing requirement in 4.b(3) above.~~

Stoop

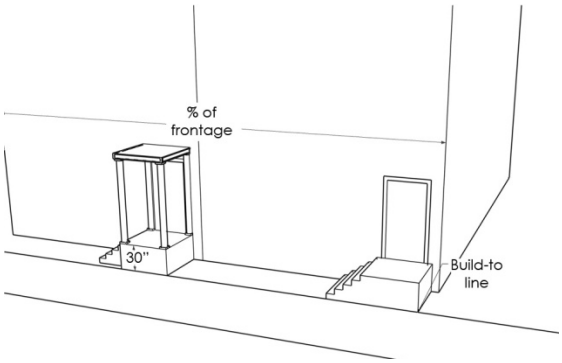

~~5~~6. Parking Structure Frontage Type

a. Description

A parking structure with facades that are partially or completely exposed at the street frontage and visible from the right-of-way.

b. Building Standards

(1) A minimum of 80% of the podium building facade shall be at the build-to line.

~~(2) The street frontage of mid-block structures shall be minimized by placing the short dimension along the street.~~

(~~3~~2) Parking structures that do not include ground floor retail shall be built to allow conversion of a minimum of 75% of the ground floor to retail space.

(3) For parking structures with more than 200 feet in contiguous length along the street frontage, a conditioned interior space of a

minimum of 24 feet in length along the street frontage, compliant with either the Storefront or Arcade Frontage Type standards, shall be created in the middle 50% of that length.

(4) Access points for pedestrians must be located to minimize pedestrian and vehicle conflicts. Pedestrian sight triangles measuring 10' by 10' or pedestrian warning devices shall be provided.

(5) The following ~~S~~specific architectural standards ~~of Sec. 6.12.3E.5, Parking Structure Frontage Type Standards,~~ shall apply~~.~~:

(a) The sloping nature of the interior structure shall not be repeated or revealed on the exterior facade. Ramping in parking structures shall be internalized to avoid an angular geometry to the perimeter of the structure.

(b) Where non-vehicular vertical circulation elements are located along the street frontage they shall meet either the Storefront or Arcade Frontage Type requirements. Entrances to non-vehicular vertical circulation shall have direct access to and from the street frontage.

(c) For exposed parking areas on all levels, a decorative wall or other decorative screening of sufficient height to screen parked vehicles shall be provided. Openings, not including driveway access, shall be a maximum of 100 square feet. Where parking spaces are exposed at the ground level, openings shall be articulated with additional columns or pilasters, window frames, decorative screens, trellises or vegetative walls.

Commentary: *Landscaping will not be considered decorative screening for the purposes of these requirements.*

(d) No more than 30% of the parking structure materials shall be unfinished concrete along the street frontage.

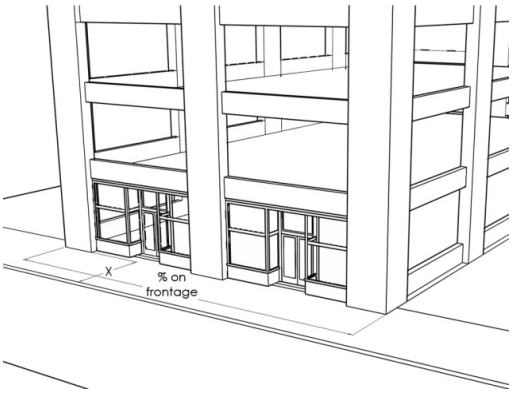

~~6~~7. Monumental Building Type

a. Description

A structure with large setbacks from the sidewalk which become publicly accessible open area. This Building Type may be utilized for public or private development with a qualifying use as listed below.

b. Qualifying Uses

(1) Monumental Building Types shall use one of the following as the primary use:

- Auditorium;
- City Hall or County Administration Complex;
- Courthouse;
- Library;
- Museum;
- Passenger Terminal;
- Places of Worship;
- School, elementary, middle or high; or
- Theater.

~~(2) For primary uses not specifically listed in this section the Planning Director or designee shall determine whether the proposed use qualifies for this Building Type based on the following criteria:~~

~~(a) The building is for large-scale public assembly; or~~

~~(b) The building meets a significant civic need.~~

c. Building Standards

(1) Minimum setbacks shall apply to this type in lieu of the build-to line as required by the corresponding Building Placement table in each Design District.

(2) A minimum street frontage of 200 feet shall be required. For developments with multiple street frontages only one frontage shall be required to meet the minimum.

~~(3) A minimum building coverage of 50% shall be required.~~

~~(4) The primary entrance shall be oriented to the street yard.~~

~~(5) A minimum of 25 % of the site shall remain publicly accessible.~~

~~(6) Street Yard Treatment:~~

~~(a) The street yard shall be within three feet of sidewalk grade at the street frontage;~~

~~(b) The street yard shall have a minimum depth of 20 feet;~~

~~(c) The street yard shall have a minimum of 30% landscaped area and 30% hardscaped area;~~

~~(d) 1 2 ½ caliper tree per 1000 feet shall be required;~~

~~(e) A minimum of one "element of interest" (i.e. fountain, art, clock, etc.) shall be provided;~~

~~(f) One or more water quality stormwater enhancements such as bioretention areas, cisterns, or vegetated swales shall be integrated into the setback treatment;~~

~~(g) One linear foot of seating per 40 square feet shall be provided; and~~

~~(h) One trash and one recycling receptacle per 5,000 square feet of open area shall be provided.~~

(~~7~~3) The following ~~S~~specific architectural standards ~~of Sec. 6.12.3E.6, Monumental Building Type Standards,~~ shall apply~~.~~:

(a) When provided, punched windows shall be a minimum of two feet wide by four feet tall.

(b) The finished floor elevation of the main building shall be raised a minimum of 18 inches above the average grade of the adjacent ground level measured at the sidewalk.

(c) The primary entrance shall be located on the front facade and shall face the street yard along the primary public or private street frontage. The front facade shall be clearly defined and have a greater level of architectural expression and articulation than the remaining facades.

(d) The main entrance shall be articulated as a major component of the main facade.

(e) Primary building materials shall consist of brick, cast in place concrete or pre-cast concrete panels, glass, and/or stone.

~~(8) This Building Type requires review by the Design District Review Team for conformance with the Durham Design Manual.~~

d. Front Facade Street Yard Standards

The front facade street yard shall meet the following requirements:

(1) It shall be within three feet of sidewalk grade at the street frontage for a minimum depth of five feet and shall be publicly accessible.

(2) It shall have a minimum depth of 20 feet and shall extend a minimum of the length of the building along the street frontage and be comprised completely of landscaping and hardscaping as described below.

(3) A minimum of 30% of the street yard area shall be comprised of hardscaping and shall include the following:

(a) The entire hardscaped area shall be covered with modular pavers, decorative concrete, or stone paving.

(b) A minimum of one “element of interest” (i.e. fountain, art, clock, etc.) shall be provided.

(c) One linear foot of seating per 40 square feet of hardscaped area shall be provided.

(d) One trash and one recycling receptacle per 5,000 square feet of hardscaped area shall be provided.

(4) A minimum of 30% of the street yard area shall be comprised of landscaping and shall include the following:

(a) One 2 ½ caliper tree per 1000 sq ft of landscaped area shall be required; and

(b) No more than 50% of the landscaped area may be lawn. The remainder of the area shall be planted with trees, shrubs, perennials, and/or annuals.

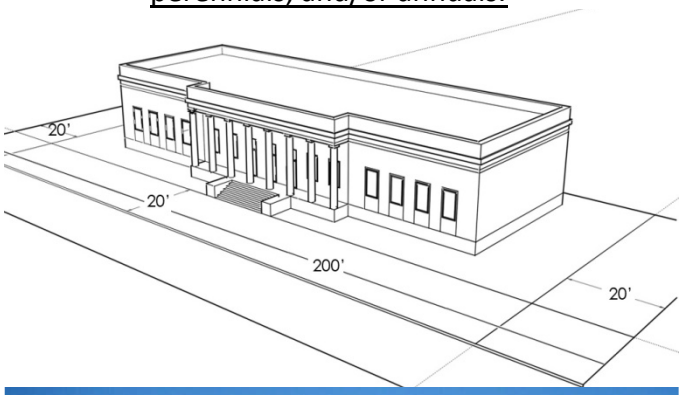

E. Additional Standards

1. Pedestrian Mall Standards

In Design Districts, pedestrian malls, when provided, shall meet the following standards:

a. Pedestrian malls shall have a minimum width of 35 feet, a maximum width of 50 feet, and shall begin and terminate at a public or private street.

b. A clear zone, free of obstructions, ten feet in width shall be provided along the length of the pedestrian mall.

c. Pedestrian malls shall provide a hardscaped surface between building facades. A maximum of 50% of the pedestrian mall shall be permitted to be landscaped provided the required clear zone is maintained for the length of the pedestrian mall.

d. Street trees as per Sec. 9.6, Street Trees, shall be provided along the street right-of-way where the pedestrian mall intersects that right-of-way.

e. The requirements of paragraph 6.12.2G.3, Streetscape Amenities, shall apply to pedestrian malls.

f. Street names may be established for pedestrian malls pursuant to paragraph 12.3.2, Street Names, and the establishments that open onto the pedestrian mall may have addresses on it when a minimum clear zone of 20 feet in width and 13.5 feet in height is provided to accommodate emergency vehicles.

g. A public access easement for any pedestrian mall shall be granted in perpetuity to the City of Durham.

2. Parking and Services

a. Surface parking and service areas shall not be located at street corners.

b. Where an alley is present service entrances, above ground equipment (as listed in Sec. 9.7, Screening), trash containers, and parking areas shall be accessed from the alley and concealed from pedestrian view. Where conflicts with utilities, sight distance triangles, pedestrian accessibility, or vehicular and service accessibility exist, access points from public or private streets shall be permitted.

c. To meet the required minimum percentage of the building facade at the build-to line, parking areas may be accessed by a tunnel through the building. When this option is utilized the design shall demonstrate that the width and height of the opening in the building is the minimum required to comply with any applicable standards.

F. Architectural Standards

1. Building Access and Pedestrian Connectivity

a. The primary entrance to each street level area shall be directly from and face the street. Entrances to the Courtyard and Forecourt Frontage Types, per paragraph 6.12.2D.4, Courtyard Frontage Type and paragraph 6.12.2D.5, Forecourt Frontage Type, are exempt from this standard.

b. Primary building entrances shall be clearly defined and articulated by decorative surrounds, thresholds, pediments, distinctive lighting, lintels, sidelights, canopies, or other distinctive architectural elements which frame and identify the entrance. Primary entrances shall also be larger in scale than secondary entrances. Entries from parking areas shall be secondary in nature and articulation.

c. Residential uses at street level shall be raised a minimum of 30 inches from street level. This provision shall not apply to the forecourt frontage types when a street yard of 10 feet or greater is utilized.

Commentary: *Entry areas to residential uses may be lower than 30 inches above street level so long as the finished floor elevation of the residential units meets the minimum above.*

d. For every 250 feet in facade length along the street frontage, a minimum of one exterior pedestrian passage shall be provided between or through buildings to allow for pedestrian connectivity.

(1) Such passages shall maintain a minimum of 8 feet of clearance in width and height.
(2) Such passages shall be architecturally distinctive.
(3) Such passages shall be illuminated as per paragraph 7.4.3, Standards.

Commentary: *Pedestrian passages may be provided between two buildings or may be provided as a tunnel through a building but must connect through and not create a dead end.*

2. Fenestration Requirements

a. A minimum percentage of building facades facing street frontages shall be glazed window or door openings as follows:

Ground Level Facade Location	Glazing Required	Glazing for portion with 4% slope or greater[1]
Non-residential at-grade ground level (sidewalk level)	65%	50%
Non-residential ground level that is either above or below sidewalk level	50%	30%
Overnight accommodations ground level	30%	30%
Residential ground level	30%	30%
Upper floors for all uses[2]	30%	30%

[1] Slope is measured parallel to the street.
[2] Upper floor windows greater than 10 square feet in area shall be divided by a minimum of one muntin, mullion, or sash.

b. The area of any exterior air intake louvers or vents may be subtracted from the total wall area when calculating glazing requirements.

c. Street Level Window Design Standards

All street level glazing used to meet these fenestration requirements shall comply with the following standards to ensure visual interest along the streetscape:

(1) Street level glazing shall have transparent glass. Mirrored and frosted glass may not be used.
(2) Street level glazing shall be maintained free of internal obstructions or partitions to a minimum depth of three feet.
(3) Street level glazing shall not be obscured by materials applied to the inside of the glass including, but not limited to: paper, signs covering more than 10% of the window area, and paint.

3. Materials

a. Vertical changes in exterior building materials may only occur at inside corners of the building facade.

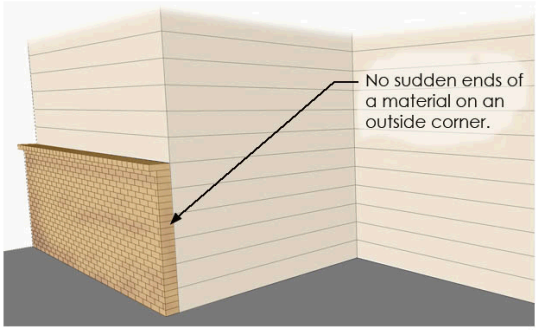

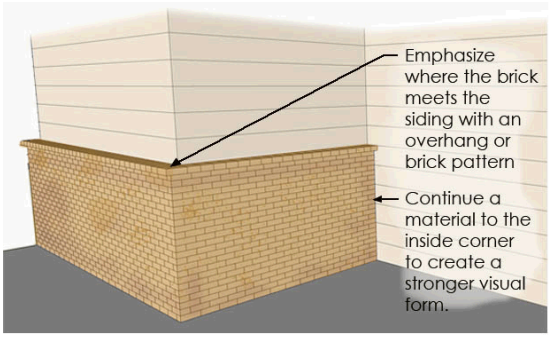

b. Horizontal changes in exterior building materials may only occur as defined lines, edges, or elements.

4. Facades

a. Facades of structures visible from public or private streets, or from private access and common areas shall be designed, as follows:

(1) Building bays shall be articulated each with a maximum width of 50 feet and building entrances at a maximum interval of 100 feet. To gain additional 25 foot increments of spacing between entrances, up to a maximum of 200 foot intervals, bay widths shall be decreased in 5 foot increments.

Commentary: *To provide building entrances at 175 foot intervals for a project, bay widths of 35 feet would be required (100+3(25)=175; 50-3(5)=35).*

(2) Building bays shall be designed with vertical articulation elements that create relief from the main facade surface (e.g. pilasters, reveals).

(3) Rooflines shall be varied to reinforce the articulation of the primary facade.

(4) For buildings in the Pedestrian Business Sub-district (Ninth Street) of the CD District, the rhythm established by typical building bay widths of the traditional commercial structures on the east side of Ninth Street between Perry Street and West Markham Avenue shall be maintained instead of the increment established in paragraph 6.12.2F.4.a.1.

b. Building tops shall be articulated with discernable cornice lines, parapets and/or fascias that create three-dimensional relief or reveal.

c. The base, or ground floor, shall appear visually distinct from the upper stories, through the use of a change in building materials or textures, window shape or size, an intermediate cornice line, an awning, arcade or portico, upper floor balconies, or similar techniques.

d. Create architectural variety by stepping back upper floors or otherwise

varying building massing.

e. Buildings on corner lots shall be designed with two facades of similar architectural expression and articulation.

f. Any corner tower element shall wrap both sides of the corner and be articulated as a distinct vertical element. This element shall not appear merely as a co-planar extension of the main facade.

G. Streetscape Standards

The following items are required for all development and shall be provided along all public and private streets. Materials, furnishings, and other specifications shall be provided in accordance with the Durham Design Manual.

1. Sidewalks

a. Sidewalks shall be provided from the back-of-curb to the build-to line in the Core sub-district of all Design Districts. In all other sub-districts, sidewalks shall be provided from the back-of-curb to the build-to line and may include a planting strip of a maximum of three feet in depth located between the sidewalk and the back-of-curb.

b. A continuous unobstructed area, or "clear zone," of five feet shall be maintained at all points along the sidewalk. For Pedestrian Malls, clear zones shall be established as per paragraph 6.12.2E.1.b.

2. Accessibility

a. Sidewalk accessibility ramps shall be provided at street intersections to direct users across crosswalks rather than diagonally into intersections.

b. Driveway aprons shall be provided so that sidewalks remain level for the width of the clear zone.

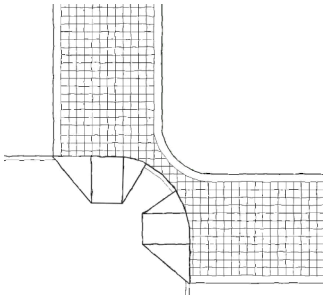

3. Streetscape Amenities

a. Amenities shall be provided as indicated in the table below and shall be calculated by rounding to the nearest linear foot or receptacle.

Sub-District	Required Amenity Standards		
	Seating	Solid Waste Receptacles	Decorative Street Lights
Core (C)	One linear foot per 15 linear feet of street frontage	One per 150 linear feet of street frontage	When existing street lights are replaced or new street lights are installed, they shall meet the specifications for decorative street lights found in the Durham Design Manual.
Support 1 (S1)	One linear foot per 20 linear feet of street frontage	One per 200 linear feet of street frontage	
Support 2 (S2)	One linear foot per 25 linear feet of street frontage	One per 250 linear feet of street frontage	
Pedestrian Business (P)	One linear foot per 15 linear feet of street frontage	One per 150 linear feet of street frontage	

b. Existing streetscape amenities along the street frontage of the development may count towards required amenities so long as they meet all dimensional requirements.

c. Seating shall be 12 to 30 inches high and a minimum of 15 inches deep. Seating that accommodates users on both sides shall be at least 30 inches deep.

d. Ledges and walls may count as seating provided that they meet the dimensional requirements of this section.

H. Additional Requirements

1. Vacant Lots

Any lot that becomes vacant due to demolition, for which a building or construction permit has expired or does not exist, shall meet the following standards in addition to any Sedimentation and Erosion control requirements of paragraph 12.10.4B, Stabilization of Disturbed Land:

a. The lot shall be planted with ground cover, grass or other appropriate landscape or hardscape material and maintained. No bare earth shall remain visible.

b. A wall, opaque fence, or landscaping with a minimum height of 36 inches and a maximum height of 48 inches shall be installed on the build-to line along the length of the street frontage. The screening shall be in conformance with the Durham Design Manual in accordance with Crime Prevention through Environmental Design principles.

c. These actions must be completed within 30 days of demolition or the expiration of a building or construction permit.

2. Temporary Pedestrian Paths

Any existing pedestrian path that will be inaccessible for more than seven days shall require a pedestrian traffic control plan as per MUTCD standards. The pedestrian traffic control plan shall be submitted to and approved by the Transportation Director or designee, through the Construction Drawing approval process. Pedestrian traffic control plans shall include new or temporary pedestrian circulation routes and pedestrian protection measures, as appropriate.

SECTION 6

Modify Article 6, District Intensity Standards, Sec. 6.12, Design Districts, paragraph 6.12.3, Downtown Design (DD) District, paragraph A, Purpose, paragraph B, Applicability, including paragraphs 1, 2, and 3, Design Manual, including paragraphs a and b, paragraph 4, Variations, including paragraphs a, b, and c, including paragraphs (1) through (5), and paragraph 5, Conformance with Adopted Plans, paragraph C, Permitted Uses and Building and Frontage Types, including paragraph 1, Permitted Uses, and paragraph 2, Permitted Building and Frontage Types, paragraph D, Site Design Standards, paragraph 1, Building Placement, paragraphs a, c, e, and g, and renumber paragraphs d through g as c through f, paragraph 2, Building Height and Massing, paragraph a, paragraph c, paragraph (1), paragraph (c), table, and paragraph (2), paragraph 3, Pedestrian Mall Standards, including paragraphs a through g, and paragraph 4, Parking and Services, including paragraphs a through d, paragraph E, Architectural Standards, including paragraph 1, Building Access and Pedestrian Connectivity, including paragraphs a through c, paragraph d including paragraphs (1) and (2), and paragraph e, paragraph 2, Fenestration Requirements, including paragraphs a through d, paragraph e, Street Level Window Design Standards, including paragraphs (1) through (3), paragraph 3, Materials, including paragraphs a and b, paragraph 4, Facades, including paragraphs a through c and commentary, paragraph 5, Parking Structure Frontage Type Standards, including paragraphs a through e, paragraph 6, Monumental Building Type Standards, including paragraphs a through e, paragraph F, Streetscape Standards, including paragraph 1, Sidewalks, including paragraphs a through c, paragraph 2, Accessibility, including paragraphs a and b, paragraph 3, Streetscape Amenities, including paragraphs a through f, and paragraph G, Additional Requirements, renumber paragraph 1, Over-street Connectors as paragraph 3, and paragraph 2, Vacant Lots, including paragraphs a through c, and paragraph 3, Temporary Pedestrian Paths, as set forth in the strikeouts and underlining below.

6.12.3 Downtown Design (DD) District

~~**A. Purpose**~~

~~The Downtown Design (DD) District is intended to encourage intense development and pedestrian activity by de-emphasizing use and focusing on the form of development and how it shapes the streetscape. The DD District includes the dense core of the downtown area as well as adjacent areas that provide a transition from the dense core to less intense, surrounding areas.~~

~~**B. Applicability**~~

~~The requirements of Sec. 6.12.2, All Design Districts, apply in the DD District and are supplemented by the requirements of this Section.~~

~~**1.** If conflicts exist between the requirements of this Section and other requirements contained in Article 6, District Intensity Standards or Sec. 7.1, Housing Types, the requirements of this Section shall supersede such conflicting requirements.~~

~~**2.** Where the DD District is overlaid by the Downtown Historic District Overlay, the standards set forth in Sec. 4.10.5, Downtown Historic District Overlay, shall apply.~~

~~**3. Design Manual**~~

~~**a.** The Durham Design Manual is established to be used to evaluate any request for a variation from DD District standards by the Design District Review Team (DDRT).~~

~~**b.** The Design Manual shall be periodically reviewed and updated as needed by the Planning Director or designee in consultation with other departments and approved by the JCCPC.~~

~~**4. Variations**~~

~~A variation to any regulation in Sec. 6.12.3D through 6.12.3F, may be granted by the approving authority, subject to the following:~~

~~**a.** Additional height shall be granted only through the provisions of Sec. 6.12.3D.2, Building Height and Massing, and not through a variation;~~

~~**b.** The Design District Review Team or the Historic Preservation Commission, as applicable, shall review the variation request and make a recommendation of approval or denial to the approving authority using the applicable standards;~~

~~**c.** A recommendation of approval shall only be made following a determination that the proposed design with variation equals or exceeds a design that complies with ordinance standards, with reference to, at a minimum, the following factors:~~

~~(1) Pedestrian access;~~

~~(2) Vehicular and service access;~~

~~(3) Visual interest and activity along the street frontage;~~

~~(4) Transition to residential districts or uses outside of the DD District; and~~

~~(5) Compatibility with, and negative impact on, nearby properties.~~

~~**5. Conformance with Adopted Plans**~~

~~Development in the DD District shall conform to any adopted plans, including applicable adopted Open Space or Gateway Plans.~~

~~**C. Permitted Uses and Building and Frontage Types**~~

~~**1. Permitted Uses**~~

~~Uses shall be permitted in accordance with Article 5, Use Regulations.~~

~~**2. Permitted Building and Frontage Types**~~

~~**Frontage or Building Type**~~	~~**DD-C**~~	~~**DD-S1**~~	~~**DD-S2**~~
~~Storefront~~	~~✓~~	~~✓~~	~~✓~~
~~Arcade~~	~~✓~~	~~✓~~	~~✓~~
~~Courtyard~~	~~✓~~	~~✓~~	~~✓~~
~~Forecourt~~	~~✓~~	~~✓~~	~~✓~~
~~Parking Structure~~	~~✓~~	~~✓~~	
~~Monumental~~	~~✓~~	~~✓~~	~~✓~~

~~D~~A. Site Design Standards

1. Building Placement

a. These standards shall apply to Frontage and Building Types:

Frontage Type	**Build-to Line**	**Side Yard Setback**	**Minimum Lot Frontage**
Storefront	12 feet	25~~0~~ feet total max. 20~~15~~ feet max. on one side	n/a
Arcade			n/a
Courtyard			100 feet
Forecourt			n/a
Parking Structure			n/a
Building Type	**Setback (from ROW)**	**Side Yard Setback**	**Minimum Lot Frontage**
Monumental	20 feet min.	20 feet min.	200 feet

b. No rear yard shall be required, except in the Support 2 sub-district where a 25 foot rear yard shall be required adjacent to a residential district or use outside of the DD District.

~~**c.** Build-to lines shall be measured from the back of the predominant curbline (not including bulb outs) or future curbline where no curb currently exists.~~

c~~d~~. For projects that encompass multiple parcels, no more than 20% of the street frontage shall be allowed as side yard on any given frontage.

d~~e~~. Where the right-of-way line is further from the curb than the build-to line, the ~~right-of-way line shall be the~~ required build-to line shall be at the right-of-way line; structures shall not be allowed in the public right-of-way.

e~~f~~. To allow for variety, buildings may be built two feet in front of or behind the build-to line.

~~**g.** The building facade percentage at the build-to line as per Sec. 6.12.2D, Frontage and Building Types, shall be met on each street.~~

2. Building Height and Massing

a. These standards shall apply to all Frontage and Building Types:

	Building Height and Massing					
	Height [1]		**Optional Corner Tower Elements**	**Height Articulation (Massing)**[3]		
DD Sub-districts	Max.	Additional with Amenities	Max. Height Above Main Bldg. Height	Podium Height to Street Width Ratios		Upper Story Step-back Ratios
Core (C)	300 feet	Unlimited	30 feet	1:1.5 min[2]	1~~2~~:1 max	x feet of step-back allows 2x feet of height
Support 1 (S1)	100 feet	150 feet	20 feet	1:2 min[2]	1.5:2~~1~~ max	x feet of step-back allows 1.5x feet of height
Support 2 (S2)	50 feet	--	12 feet	1:3 min[2]	~~1:1 max~~ --	~~1x~~ --

[1] Corner tower elements shall be allowed in addition to additional height.
[2] Monumental Building Types shall be exempted from height articulation minimums.
[3] Height Articulation standards are described and illustrated in paragraph 6.12.2C.1 and 2.

b. Corner Tower Elements

When provided, a corner tower element shall be limited in width and depth to a maximum of 25% of the building frontage.

c. Additional Height

(1) At the time of subdivision or site plan approval, additional building height may be granted by the approving authority, provided that the following findings are made:

(a) The additional height will not adversely affect nearby properties;

(b) The project design allows for adequate light, air, and open space; and

(c) Project amenities are provided to compensate for the additional height in accordance with the table below. Project amenities required elsewhere in this ordinance or in the City Code may not be used as amenities to qualify for additional height.

Project Amenities	Standards[1]	Additional Height Allowance	
		Core	Support 1
Historic Preservation	Undertake or incorporate the adaptive reuse of an existing historic structure, including local landmarks, National Register properties, or pivotal or contributing buildings in a historic district. The renovation may add onto the structure but may not demolish any exterior historically significant portion of the structure.	45 feet	30 feet
Affordable Housing	Provide affordable housing that complies with the provisions in ~~Sec.~~paragraph 6.6.1, Affordable Housing Density Bonus.	45 feet	30 feet
Green Roof	Provide a green roof in accordance with City of Durham Public Works standards, equivalent to at least 50% of the building footprint area.	15 feet	15 feet
Pedestrian Mall	Provide a pedestrian mall in accordance with ~~Sec.~~paragraph 6.12.2E.1~~3D.3~~, Pedestrian Mall Standards.	45 feet	30 feet
Public Art	Provide public art in accordance with the Public Art section of the Durham Design Manual.	15 feet	15 feet
Sustainability	Provide a minimum of four of the strategies listed in the Sustainable Architecture section of the Durham Design Manual.	20 feet	20 feet
Alternative Vehicle Parking	Provide dedicated off-street parking spaces for shared car program vehicles, alternative fuel/energy vehicles, motorcycles, or scooters at a minimum of 5% of the provided parking spaces.	10 feet	10 feet
Stormwater Capture and Reuse	Provide cistern(s) to collect stormwater from onsite rooftop impervious surfaces with a minimum volume to accommodate the first one inch of rainfall. To receive this credit the runoff must be captured and used on site for the purposes of flushing toilets or irrigation.	25 feet	20 feet
Street Tree Pit Stormwater Filtration System	Provide a minimum of 50% of street trees that use a Public Works approved tree pit stormwater filtration system.	15 feet	15 feet
Additional Amenities	The Planning Director or designee shall permit additional amenities to meet this requirement so long as: • The amenity shall be provided on site; • The amenity shall be something not required elsewhere in this ordinance; and • The applicant shall demonstrate that the amenity will be of community benefit.	15 feet	15 feet

[1] These apply in addition to any applicable Ordinance standards for provision of the above amenities.

(2) Additional height granted per this section is subject to the upper story step-back requirements of ~~Sec.~~paragraph 6.12.2C, Height Articulation and ~~Sec.~~paragraph 6.12.3A~~D~~.2.a, Building Height and Massing table.

(3) The Board of Adjustment may grant additional height beyond that granted by the approving authority in the Support 1 or Support 2 sub-districts upon the issuance of a minor special use permit pursuant to Sec. 3.9, Special Use Permit, with the following additional findings:

(a) The proposed development allows for adequate light, air and open space access, if applicable, to adjacent properties; and

(b) The proposed development adequately protects surrounding properties from any adverse effects of the proposal including adverse impacts of the height of the structure considering in particular the height of structures in the immediate vicinity.

~~**3. Pedestrian Mall Standards**~~

~~In the DD District, pedestrian malls, when provided, shall meet the following standards:~~

~~**a.** Pedestrian malls shall have a minimum width of 35 feet and a maximum width of 50 feet.~~

~~**b.** A clear zone, free of obstructions, of ten feet in width shall be provided along the length of the pedestrian mall.~~

~~**c.** Pedestrian malls shall provide a hardscaped surface between building facades. Exceptions may be granted by the approving authority for landscaped areas provided the required clear zone is maintained for the length of the pedestrian mall.~~

~~**d.** Street trees as per Sec. 9.6, Street Trees, shall be provided where the pedestrian mall intersects a right-of-way.~~

~~**e.** The requirements of Sec. 6.12.3F.3, Streetscape Amenities, shall apply to pedestrian malls.~~

~~**f.** Names, as per Sec. 12.3.2, Street Names, may be established for pedestrian malls and the establishments that open onto it may have addresses on the pedestrian mall when a minimum clear zone of 20 feet in width and 13.5 feet in height is provided to accommodate emergency vehicles.~~

~~**g.** A public easement for any pedestrian mall must be granted in perpetuity to the City of Durham.~~

~~**4. Parking and Services**~~

~~**a.** New surface parking and service areas shall not be located at street corners.~~

~~**b.** Parking entrances to garages or driveways shall be located as close as possible to the side and rear of each lot.~~

~~**c.** Where an alley is present, services, above ground equipment, trash containers, and parking areas shall be accessed from the alley and~~

~~concealed from pedestrian view except as otherwise allowed by the Public Works director or designee.~~

~~**d.** To meet the required minimum percentage of the building facade at the build-to-line, parking areas may be accessed by tunneling through the building. When this option is utilized the design shall demonstrate that the width and height of the opening in the building is the minimum required to comply with any applicable standards.~~

~~**E. Architectural Standards**~~

~~**1. Building Access and Pedestrian Connectivity**~~

~~**a.** The primary entrance to each street level area shall be directly from and face the street. Entrances on the Courtyard and Forecourt Frontage Types, per Sec. 6.12.2D.3, Courtyard Frontage Type and Sec. 6.12.2D.4, Forecourt Frontage Type, may be exempt from this standard.~~

~~**b.** Primary building entrances shall be clearly defined and articulated. Entries from parking areas shall be secondary in nature and articulation.~~

~~**c.** Residential uses proposed at street level shall have their primary entry raised a minimum of 30 inches from street level.~~

~~**d.** Where street frontage is at least 250 feet in length, private pedestrian passages shall be provided between or through buildings.~~

~~(1) Such passages shall maintain a minimum of 8 feet of clearance in width and height.~~

~~(2) Such passages, if exterior shall be lit as per Sec. 7.4.3, Standards.~~

~~**e.** Multiple entries shall be required at a minimum of 150 foot spacing to encourage walkability and street activity.~~

~~**2. Fenestration Requirements**~~

~~**a.** A minimum percentage of building facades shall be glazed window or door openings as follows:~~

~~**Ground Level Facade Location**~~	~~**Glazing Required**~~	~~**Glazing for portion with 4% slope or greater**~~[1]
~~At-grade ground level (sidewalk level)~~	~~65%~~	~~50%~~
~~Not at-grade ground level (above or below sidewalk level)~~	~~50%~~	~~30%~~
~~All upper floors~~	~~30%~~	~~—~~

~~[1] Exceptions to glazing requirements shall be allowed for portions of facades with a four percent slope or greater along the street frontage so long as facade variations are maintained as per Sec. 6.12.3H.3, Facades.~~

~~**b.** If ground level residential use is proposed, the ground floor glazing shall meet the upper floor glazing requirement.~~

~~**c.** Monumental Building Types shall provide glazing equivalent to the upper floor glazing requirement.~~

~~**d.** Internal and external vertical and horizontal bars on windows visible from public rights-of-way are prohibited.~~

~~**e. Street Level Window Design Standards**~~

~~All street level glazing shall comply with the standards of this section to ensure visual interest along the streetscape.~~

~~(1) All required storefront and non-residential street level glazing shall have transparent glass. Mirrored and frosted glass may not be used to meet these transparency requirements.~~

~~(2) Street level glazing shall be maintained free of internal obstructions or partitions to a minimum depth of three feet.~~

~~(3) Street level glazing shall not be obscured by materials applied to the inside of the glass including, but not limited to: paper, signs covering more than 10% of the window area, and paint.~~

~~**3. Materials**~~

~~**a.** Material changes shall occur at a change of plane. Structures shall not have material changes at their outside corners.~~

~~**b.** Co-planar material changes shall result in either defined horizontal lines or defined vertical edges or elements.~~

~~**4. Facades**~~

~~**a.** For development on sites with more than 50 feet of street frontage, the massing or facades of new buildings shall be varied or employ a level of architectural detailing sufficient to ensure visual interest.~~

~~***Commentary:*** *Building variations to ensure visual interest may include: recesses and projections, changes in building materials, changes in fenestration patterns, roofline variations, and decorative elements.*~~

~~**b.** Buildings on corner lots shall be designed with two facades of similar architectural expression and articulation.~~

~~**c.** A corner tower element shall wrap both sides of the corner and be articulated as a distinct vertical element. This element shall not appear merely as a co-planar extension of the main facade.~~

~~**5. Parking Structure Frontage Type Standards**~~

~~**a.** The sloping nature of the interior structure shall not be repeated or revealed on the exterior facade. Ramping in parking structures shall be internalized to avoid an angular geometry to the perimeter of the structure.~~

~~**b.** Stair towers and elevator cores shall be designed to be distinct, taller masses that intersect the mass of the main structure when located at the perimeter. These elements shall be topped with gabled roofs or other architectural accents.~~

~~**c.** A decorative wall or other screening of sufficient height to screen parked vehicles shall be provided.~~

~~**d.** Access points to the parking structure for pedestrians shall be located to minimize pedestrian and vehicle conflicts. Pedestrian sight triangles measuring ten foot by ten foot or pedestrian warning devices shall be provided.~~

~~**e.** The street frontage of mid-block structures shall be minimized by placing its short dimension along the street edge.~~

~~**6. Monumental Building Type Standards**~~

~~**a.** When provided, punched windows shall be a minimum of two feet wide by four feet tall.~~

~~**b.** The main building shall be raised a minimum of 30 inches above the average grade of the adjacent ground level.~~

~~**c.** The front facade shall be clearly defined and have a greater level of architectural expression and articulation than the remaining facades.~~

~~**d.** The main entrance shall be articulated as a major component of the main facade.~~

~~**e.** Primary building materials shall consist of masonry, concrete, glass, or stone.~~

~~**F. Streetscape Standards**~~

~~The following provisions are required for all development and shall be provided along all public and private streets. Materials, furnishings, and other specifications shall be provided in accordance with the Durham Design Manual.~~

~~**1. Sidewalks**~~

~~**a.** Sidewalks shall be provided from the back-of-curb to the build-to line, except in the Support 2 sub-district where a planting strip may be located between the sidewalk and the back-of-curb.~~

~~**b.** A continuous unobstructed area, or "clear zone," shall be maintained at all points along the sidewalk, as follows:~~

~~**Downtown Design Sub-District**~~	~~**Required Clear Zone Width**~~
~~Core (C)~~	~~6 feet~~
~~Support 1 (S1)~~	~~5 feet~~
~~Support 2 (S2)~~	~~5 feet~~

~~**c.** The Planning Director or designee may allow an alternative clear zone dimension for existing buildings to the maximum extent feasible.~~

~~**2. Accessibility**~~

~~**a.** Sidewalk accessibility ramps shall be provided at street intersections to direct users across crosswalks rather than diagonally into intersections.~~

~~**b.** Driveway aprons shall be provided so that sidewalks remain level for the width of the required clear zone.~~

~~**3. Streetscape Amenities**~~

~~**a.** Amenities shall be provided as indicated in the table below and shall be calculated by rounding to the nearest linear foot or receptacle.~~

~~**Downtown Design Sub-District**~~	~~**Required Amenity Standards**~~	
	~~**Seating**~~	~~**Solid Waste Receptacles**~~
~~Core (C)~~	~~One linear foot per 15 linear feet of street frontage~~	~~One per 150 linear feet of street frontage~~
~~Support 1 (S1)~~	~~One linear foot per 20 linear feet of street frontage~~	~~One per 200 linear feet of street frontage~~
~~Support 2 (S2)~~	~~One linear foot per 25 linear feet of street frontage~~	~~One per 250 linear feet of street frontage~~

~~**b.** Where streetscape amenities exist, the Planning Director or designee may allow alternative provisions crediting existing amenities. Seating at transit stops shall not count towards existing amenities.~~

~~**c.** Driveway widths shall not be included in the calculation of linear street frontage.~~

~~**d.** Seating shall be 12 to 30 inches high and a minimum of 15 inches deep. Seating that accommodates users on both sides shall be at least 30 inches deep.~~

~~**e.** Moveable chairs may count as 2.5 linear feet of seating each, provided that the chairs remain publicly accessible throughout the day.~~

~~**f.** Ledges and walls may count as seating provided that they meet the requirements of this section.~~

~~**G. Additional Requirements**~~

~~1~~3. Over-street Connectors

A major special use permit under Sec 3.9, Special Use Permit, shall be required for all over-street connections, including but not limited to aerial pedestrian bridges and enclosed building areas. In addition to the requirements of Sec 3.9, the applicant shall demonstrate that the project's relationship to the street and street level objectives and activities have been adequately addressed, and the City Council shall approve the permit only if it finds that:

a. The project will not create negative effects on the surrounding properties; and

b. The project will be aesthetically harmonious with or complementary to the surrounding buildings and streetscape, and will not have a substantial negative impact on downtown views.

~~**2. Vacant Lots**~~

~~Any lot that becomes vacant due to demolition, for which a building or construction permit has expired or does not exist, shall meet the following standards in addition to any Sedimentation and Erosion control requirements of Sec. 12.10.4B, Stabilization of Disturbed Land:~~

~~**a.** The lot shall be planted with ground cover, grass or other appropriate landscape or hardscape material and maintained. No bare earth shall remain visible.~~

~~**b.** A berm, wall, opaque fence, or landscaping with a minimum height of 36 inches and a maximum height of 48 inches shall be installed on the build-to line along the length of the street frontage. The screening shall be in conformance with the Durham Design Manual in accordance with Crime Prevention through Environmental Design principles.~~

~~**c.** These actions must be completed within 30 days of the expiration of the building or construction permit.~~

~~**3. Temporary Pedestrian Paths**~~

~~Any existing pedestrian path that will be inaccessible for more than seven days, shall be replaced with an alternative pedestrian path. An alternative pedestrian plan shall be submitted to and approved by the Public Works Director or designee prior to receiving a building permit. Alternative pedestrian circulation plans shall include new or temporary pedestrian circulation routes and pedestrian protection measures, as appropriate.~~

SECTION 7

Modify Article 6, District Intensity Standards, Sec. 6.12, Design Districts, adding new paragraph 6.12.4, Compact Design (CD) District, including paragraph A, Site Design Standards, including paragraph 1, Building Placement, including paragraphs a through e, and paragraph 2, Building Height and Massing, including paragraph a, paragraph b, Corner Tower Elements, including paragraphs (1) and (2), paragraph c, Pedestrian Business Sub-district (Ninth Street) Height, including paragraph (1), and paragraph (2) including paragraphs (a) and (b), and paragraph d, Additional Height with Minor Special Use Permit, including paragraphs (1) through (3), and paragraph 3, Residential Density, including paragraph a and paragraph b including paragraphs (1) through (3), paragraph B, Additional Use Limitations, including paragraphs 1 and 2; and Sec. 6.13, Measurement and Computation, paragraph 6.13.1, Height, paragraph A, paragraphs 1 and 2, as set forth in the strikeouts and underlining below.

6.12.4 Compact Design (CD) District

A. Site Design Standards

1. Building Placement

a. These standards shall apply to Frontage Types:

Frontage Type	Build-to Line	Side Yard Setback (maximum)	Rear Yard Setback (minimum)	Minimum Lot Frontage
Storefront	12 feet	25 feet total max. 20 feet max. on one side	10 foot	n/a
Arcade				n/a
Courtyard				100 feet
Forecourt				n/a
Parking Structure				n/a
Building Type	**Setback (from ROW)**	**Side Yard Setback**	**Rear Yard Setback (minimum)**	**Minimum Lot Frontage**
Monumental	20 feet min.	20 feet min.	10 foot	200 feet

b. To allow for variety, buildings may be built two feet in front of or behind the build-to line.

c. Where the right-of-way line is further from the curb than the build-to line, the required build-to line shall be at the right-of-way line; structures shall not be allowed in the public right-of-way.

d. For projects that encompass multiple parcels, no more than 20% of the total street frontage shall be permitted as side yard on any single frontage.

e. In the P sub-district and the S2 sub-district of the CD District, the maximum building length along the street frontage shall be 400 feet.

2. Building Height and Massing

a. These standards shall apply to all Frontage Types:

	Building Height and Massing					
	Height[1]		Optional Corner Tower Elements	Height Articulation (Massing)[5]		
CD Sub-districts	Max.	Additional with mSUP[2]	Max. Height Above Main Bldg. Height	Podium Height to Street Width Ratios[4]		Upper Story Step-back Ratios[4]
Core (C)	90 feet	110 feet	20 feet	1:1.5 min	1:1 max	x feet of step-back allows 2~~3~~x feet of height
Support 1 (S1)	60 feet	75 feet	15 feet	1:2 min	1.5:2 max	x feet of step-back allows x feet of height
Support 2 (S2)	45 feet	--	--	1:3 min	1:2 max	

Pedestrian Business (P)	40 feet/ 55 feet[3]	--	--	1:3 min	1.5:2 max	2x feet of step-back allows x feet of height

[1] Corner tower elements shall be allowed in addition to additional height.
[2] Project amenities shall be provided according to paragraph 6.12.4A.2.d.
[3] Specific height restrictions are located in paragraph 6.12.4A.2.c.
[4] Monumental Building Types shall be exempted from height articulation minimums.
[5] Height Articulation standards are described and illustrated in paragraph 6.12.2C.1 and 2.

b. Corner Tower Elements

(1) Corner tower elements shall only be permitted on building corners located at the intersection of public or private streets.

(2) When provided, all corner tower elements on a single building shall have a combined maximum width and depth of 20% of the building frontage or 30 feet, whichever is less.

c. Pedestrian Business Sub-district (Ninth Street) Height

For properties within the Pedestrian Business Sub-district (Ninth Street) the following height restrictions shall apply:

(1) East side of Ninth Street: Building height shall not exceed 40 feet and shall not exceed three stories.

(2) West side of Ninth Street:

(a) Along the western Ninth Street frontage, building height shall not exceed 55 feet and shall not exceed four stories in the area extending 230 feet in from the north and south sub-district boundaries in accordance with the figure below.

(b) If not governed by paragraph (a) above, building height shall not exceed 40 feet in height and shall not exceed three stories.

d. Additional Height with Minor Special Use Permit

At the time of site plan approval, additional building height may be granted through the issuance of a minor special use permit, as per Sec. 3.9, Special Use Permit, in accordance with the table in paragraph 6.12.4A.2.a above, provided that the additional following findings are made:

(1) The proposed development adequately protects surrounding properties from any adverse effects of the additional height including adverse impacts of the height of the structure considering in particular the height of structures in the immediate vicinity;

(2) The proposed development allows for adequate light, air and open space access, if applicable, to adjacent properties; and

(3) A project amenity shall be provided to compensate for the additional height in accordance with the table below. Project amenities required elsewhere in this ordinance or in the City Code may not be used as amenities to qualify for additional height. Only one increment of additional height is allowed. A single amenity cannot be used for both additional height and additional density in paragraph 6.12.4A.3.b.

Project Amenities	**Standards**[1]	**Additional Height Allowance**	
		Support 1	**Core**
Affordable Housing	Provide affordable housing that complies with the provisions in paragraph 6.6.1, Affordable Housing Density Bonus.	15 feet	20 feet
Pedestrian Mall	Provide a pedestrian mall in accordance with paragraph 6.12.2E.1, Pedestrian Mall Standards.	15 feet	20 feet
Public Parking	Provide a minimum of 20% of the parking within the development dedicated for public use. The public parking provided shall not count towards maximum parking allowed for the project.	15 feet	20 feet
Vertical Integration of Uses	Provide commercial use on the first floor and commercial or office use on the second floor with at least 65% of the total floor area of the structure allocated to residential uses.	15 feet	20 feet

[1]Additional height granted per this section is subject to the upper story step-back requirements of paragraph 6.12.2C, Height Articulation, and paragraph 6.12.4A.2.a, Building Height and Massing.

3. Residential Density

a. Residential density in the CD district shall be in accordance with the following table:

Sub-districts	**Residential Density**	
	Min. (units/acre)	**Max. (units/acre)**
CD-C	22	60
CD-S1	16	52.5
CD-S2	8.7	20
CD-P	16	52.5

b. At the time of site plan approval, additional residential density may be granted through the issuance of a minor special use permit, as per Sec. 3.9, Special Use Permit, provided that the additional following findings are made:

(1) The proposed development adequately protects surrounding properties from any adverse effects of the additional density.

(2) The proposed development allows for adequate light, air and open space access, if applicable, to adjacent properties.

(3) A project amenity shall be provided to compensate for the additional density in accordance with the table below. Project amenities required elsewhere in this ordinance or in the City Code may not be used as amenities to qualify for additional density. Only one increment of additional density is allowed. The same amenity cannot be used for both additional density and additional height in paragraph 6.12.4A.2.d, Additional Height with Minor Special Use Permit.

Project Amenities	**Standards[1]**	**Additional Density Allowance**
Affordable Housing	Provide affordable housing that complies with the provisions in paragraph 6.6.1, Affordable Housing Density Bonus.	15-40%
Pedestrian Mall	Provide a pedestrian mall in accordance with paragraph 6.12.2E.1, Pedestrian Mall Standards.	15%
Public Parking	Provide a minimum of 20% of the parking provided within the development for public use. The public parking provided shall not count towards maximum parking allowed for the project.	15%
Vertical Integration of Uses	Provide commercial use on the first floor and commercial or office use on the second floor with at least 65% of the total floor area of the structure allocated to residential uses.	15%

c. All projects of 200,000 square feet or greater within the S2 sub-district of the CD District shall provide the minimum residential density in accordance with the table in paragraph 6.12.4A.3.a above.

B. Additional Use Limitations

1. Commercial uses in the Support 2 sub-district of the CD District shall be limited to 20,000 square feet in size per establishment and shall only be permitted when the property has frontage on a major or minor thoroughfare as designated in the adopted Thoroughfare Plan.

2. Non-commercial uses shall not be permitted on the ground level of the Pedestrian Business sub-district (Ninth Street) of the CD District.

Commentary: *This does not prohibit residential access points from being located on the ground level in the Pedestrian Business sub-district.*

Sec. 6.13 Measurement and Computation

6.13.1 Height

A. Height shall be determined by the vertical distance from the average of the finished ground level to the finished roof surface of a flat roof or the point at the average height of a roof having a pitch, except for mansard roofs, which shall be measured to the highest finished surface. For buildings with more than one facade along the street, each building facade shall be measured independently. Height for any building with multiple roof levels shall be determined by the highest roof level.

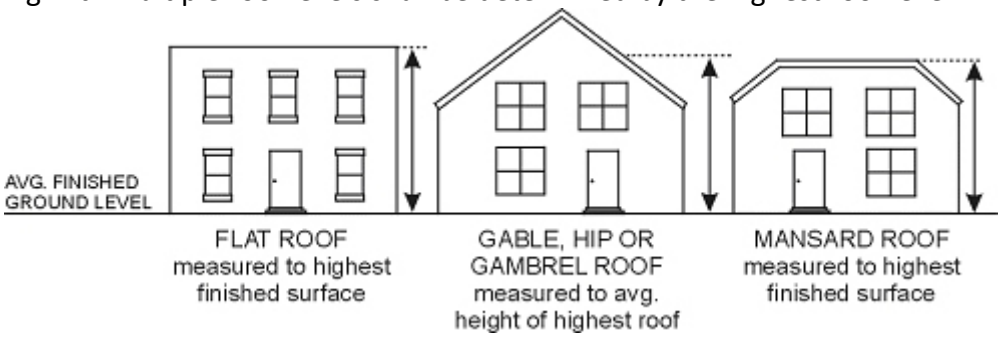

1. Except in ~~the D~~Design Districts, height for any building with multiple roof levels shall be determined by the highest roof level.

2. In ~~the D~~Design Districts for buildings where multiple height standards apply, each portion of the building is allowed to build to the allowable height in the sub-district where that portion of the building is located. Height will be computed independently for each portion of the building in each sub-district.

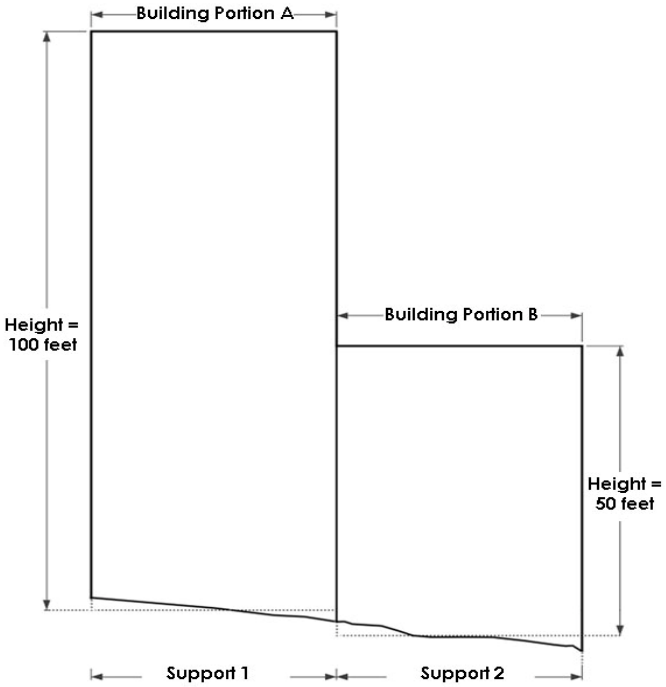

[Paragraphs B and C are omitted.]

[Paragraphs 6.13.2 through 6.13.4 are omitted.]

SECTION 8

Modify Article 7, Design Standards, Sec. 7.1, Housing Types, Commentary; Sec. 7.3, Design Standards, paragraph 7.3.1, Facade/Roofline Treatment, paragraph A; and Sec. 7.6, Utility and Trash Handling, paragraph 7.6.7, Additional Standards for the DD District, paragraph D, including paragraph 1; and Article 9, Landscaping and Buffering, Sec. 9.4, Project Boundary Buffers, paragraph 9.4.1, Applicability, paragraph C, paragraph 9.4.5, Constructed Buffer, paragraph C, Urban, Compact Neighborhood, and Downtown Tiers, paragraph 3, paragraph 9.4.8, Walls, Berms and Fences in Buffers, paragraph A, Walls, paragraphs 5, paragraph a, paragraph 6, and new paragraph 7; Sec. 9.6, Street Trees, paragraph 9.6.2, Required Street Trees, paragraph A, and paragraph D, Street Trees in the CI and DD Districts, paragraph 3, and paragraph 9.6.4, Street Tree Installation, paragraphs E, F, and I; Sec. 9.8, Vehicular Use Area Landscaping, paragraph 9.8.1, General, paragraph B, Applicability, paragraph 4, and paragraph 9.8.4, Vehicular Use Area Landscaping, paragraph A, Applicability, paragraphs 1 and 2, and paragraph B, Standards, paragraph 1, General, paragraph b, Landscaping within Vehicular Use Areas, paragraph (1) and (2), and renumber paragraph (2) and paragraph (3), and paragraph 3, Amenities; and Sec. 9.9, Fences and Walls, paragraph 9.9.5, DD District Additional Standards, as set forth in the strikeouts and underlining below.

Sec. 7.1 Housing Types

Commentary: *The following housing types are established to provide a common terminology for housing in Durham. The choices include a variety of housing types, some of which may not be currently found in Durham, to provide for their potential use in the future. These housing types do not apply to ~~the D~~Design Districts, where all uses, including residential, shall comply with Sec. 6.12.2D, Frontage and Building Types. All drawings in this section are for illustrative purposes only.*

[Paragraphs 7.1.1 through 7.1.10 are omitted.]

Sec. 7.3 Design Standards

7.3.1 Facade/Roofline Treatment

A. This section applies to all non-industrial facilities, except in Design Districts, with exterior elevations that are greater than 100 feet in total length or diameter and visible from a public right-of-way or from adjacent residential development.

[Paragraph B is omitted.]

[Paragraph 7.3.2 is omitted.]

Sec. 7.6 Utility and Trash Handling

[Paragraphs 7.6.1 through 7.6.6 are omitted.]

7.6.7 Additional Standards for ~~the D~~Design Districts

[Paragraphs A through C, E, and F are omitted.]

D. If approved by the ~~Public Works~~Transportation Director or designee, a site design may require solid waste collection vehicles to back a maximum of 40 feet into sites given the following considerations:

1. Provided that pickup only occurs during off-peak hours, as determined by the ~~Public Works~~Transportation Director or designee;

[Paragraphs 2 and 3 are omitted.]

Sec. 9.4 Project Boundary Buffers

9.4.1 Applicability

[Paragraphs A and B are omitted.]

C. No project boundary buffers shall be required for property in ~~the D~~Design Districts, unless the proposed project is adjacent to a residential district or use in the Urban or Suburban Tier. Where required, project boundary buffers in ~~the D~~Design Districts shall be provided at 0.2 opacity in accordance with paragraph~~Sec.~~ 9.4.5C, Urban and Compact Neighborhood Tiers. No buffers shall be required along rights-of-way in Design Districts regardless of their width.

[Paragraphs 9.4.2 through 9.4.4, 9.4.6, 9.4.7, 9.4.9, and 9.4.10 are omitted.]

9.4.5 Constructed Buffer

[Paragraphs A, B, and D through F are omitted.]

C. Urban, Compact Neighborhood, and Downtown Tiers

1. The buffer width and planting requirements in the table below shall be used to meet the opacity standards established in paragraph 9.4.3B, Project Boundary Buffer Table for the Urban Tier and those areas of the Downtown and Compact Neighborhood Tiers that adjoin development in the Urban or Suburban Tiers and the opacity standards established in paragraph 9.4.1C for Design Districts.

[Table is omitted.]

2. The interactive buffer model established pursuant to paragraph 9.4.7, Interactive Buffer Model, shall be permitted to calculate acceptable reductions in buffer widths or variable mixes of plant units. The model may also be used when the slope of the buffer is at least 15%, as set forth in paragraph 9.4.5D, Existing Slope Impacts.

3. For projects within the CI ~~d~~District and Design Districts, an alternative to project boundary buffers shall be permitted with the following provisions:

a. A solid hedge composed of a minimum of 40 evergreen understory trees per 100 linear feet is used in lieu of the buffer; or,

b. A wall pursuant to paragraph 9.4.8, Walls, Berms, and Fences in Buffers, is provided so long as any wall that is a structural part of a building may only be used if there is no glazing in the wall.

9.4.8 Walls, Berms and Fences in Buffers

Where walls, berms or fences are built within any required project boundary buffer, they shall meet the following requirements.

A. Walls

[Paragraphs 1 through 4 are omitted.]

5. Walls used within the CI ~~d~~District in lieu of a required buffer width shall be permitted, with the following provisions:

a. The wall shall have a ~~minimum~~ height of eight feet; and

b. The wall is not within sight distance triangle(s).

6. Within the CI District and Design Districts, an alternative project boundary buffer shall be permitted when the adjoining lot has a wall included as part of a required buffer, the wall is located within five feet of the property line, and a recorded easement exists for the wall and buffer.

7. Walls used within Design Districts in lieu of a required buffer width shall be permitted, with the following provisions:

a. The wall shall have a minimum height of six feet; and

b. The wall is not within sight distance triangle(s).

Sec. 9.6 Street Trees

[Paragraphs 9.6.1 and 9.6.3 are omitted.]

9.6.2 Required Street Trees

A. In all developments outside the CI District or DesignD Districts, except residential development exempted pursuant to paragraphSec. 9.6.1, Applicability, the developer shall either retain or plant trees such that there is an average of at least one street tree for every 40 feet of street frontage along the sides of all existing and proposed rights-of-way (except alleys), and private street easements. Street trees shall be located within 30 feet of the right-of-way or street easement and in a street yard unless the City Public Works Director or the NCDOT, or designees as appropriate authorize their location in a right-of-way and, if the trees are existing trees, the root protection zone outside of the right-of-way is protected, except where the location of the street trees in the right-of-way will conflict with public utilities. If a conflict exists with public utilities, street trees shall be located in the required street yard.

[Paragraphs B and C are omitted.]

D. Street Trees in the CI District and-DDesign Districts

[Paragraphs 1 and 2 are omitted.]

3. Alternative Street Tree Requirement

a. If the prescribed street tree location is in conflict with any public utility or traffic control device, an alternative may be provided in lieu of the street tree requirement with the approval of the Planning Director or designee.

b. Where development incorporates existing buildings and the distance from the back-of-curb to the building face is less than 10 feet, an alternative may be provided in lieu of the street tree requirement with the approval of the Planning Director or designee.

c. Street tree alternatives, when provided, shall comply with the standards in the table below:

Alternative	Standards	CI	Design Districts
Public Art	Shall provide a minimum of 100 square feet of public art along the street frontage in-lieu of each required street tree	--	√
Green screen or wall	Shall be a minimum of 100 square feet along the street frontage in-lieu of each required street tree and shall be a minimum of 50% evergreen.	--	√
Awnings	Shall be a minimum of 10 linear feet along the street frontage in-lieu of each required street tree and shall be a minimum of 5 feet in depth and kept in good repair.	√	√
Landscape Planters	Shall provide a minimum of 2 landscape planters with a planting area of 5 square feet or greater in-lieu of each required street tree. Planters must be continually planted and maintained.	√	√

9.6.4 Street Tree Installation

[Paragraphs A through D, G, and H are omitted.]

E. In the Urban and Compact Neighborhood Tiers, except in Design Districts, at least 200 square feet of contiguous growing area, without encroachments other than sidewalks, shall be provided for each tree. The ~~Public Works~~Planning Director, or designee, with a recommendation from the Urban Forester, shall have the authority to approve a smaller street tree growing area ~~of a smaller size~~ where other special features are utilized ~~in the site design~~ to provide for adequate growth ~~of street trees~~.

F. In ~~the D~~Design Districts, at least 200 square feet of contiguous growing area, without encroachments other than sidewalks, shall be provided for each tree. If the critical root path system is utilized, as detailed in the Durham Landscape Guidelines, each tree shall be provided 150 square feet of contiguous growth area. The Planning Director, or designee, with a recommendation from the Urban Forester, shall have the authority to approve a smaller street tree growing area where other special features are utilized to provide for adequate growth.

I. In the ~~DD~~ Core sub-district of Design Districts, ~~the floating~~a suspended sidewalk system over street tree planting pits shall be utilized to maximize useable sidewalk area.

Sec. 9.8 Vehicular Use Area Landscaping

9.8.1 General

[Paragraphs A and C are omitted.]

B. Applicability

The following areas shall meet the requirements of this section.

[Paragraphs 1 through 3 are omitted.]

4. Only the regulations in paragraph~~Sec.~~ 9.8.4, Vehicular Use Area Landscaping in ~~the D~~Design Districts, shall apply to vehicular use areas in ~~the D~~Design Districts.

[Paragraphs 9.8.2 and 9.8.3 are omitted.]

9.8.4 Vehicular Use Area Landscaping in the CI District and the ~~D~~Design Districts

A. Applicability

1. This section applies to any vehicular use area located in the CI District and ~~D~~Design Districts that is not located within a parking structure, including parking lots where no building permit is required.

2. For parking structures the architectural standards set forth in paragraph~~Sec.~~ 6.12.2D~~3E~~.6, Parking Structure Frontage Type ~~Standards~~, shall apply. No vehicular use area landscaping shall be required.

B. Standards

1. General

a. Vehicular Use Area Perimeter Landscaping

A landscaped area equal to six square feet for each linear foot of street frontage shall be provided adjacent to and outside of the right-of-way. This area shall be provided along the entire street frontage, less driveways, and shall have a minimum depth of three feet and a maximum depth of 10 feet.

b. Landscaping within Vehicular Use Areas

(1) Vehicular use areas completely internal to the block and not adjacent to a street shall be exempt from providing internal landscaping, except as stated in paragraph 9.8.4B.1b(3) below.

(2~~3~~) The provision in paragraph 9.8.4B.1.b(1) above shall not apply in the CI District and the CD District where the vehicular use area is larger than 10,000 square feet or 40 parking spaces, whichever is smaller~~larger~~, but shall instead meet the following standards:

(a) Such parking areas shall be required to meet the standards of paragraph 9.8.3, Landscaping within Vehicular Use Areas.

(b) Such parking areas shall provide a pedestrian path at least four feet wide, unobstructed and clear of vehicle overhang, paved with unit pavers or a monolithic surface, and which shall connect the parking area to the sidewalk or building.

(~~2~~3) Surface parking areas with 65 feet of street frontage or greater shall be required to meet the standards of paragraph~~Sec.~~ 9.8.3, Landscaping within Vehicular Use Areas.

[Paragraph c is omitted.]

[Paragraph 2 is omitted.]

3. Amenities

Streetscape amenities in the Design Districts may be located in the vehicular use area landscaping area, adjacent to the street.

Sec. 9.9 Fences and Walls

[Paragraphs 9.9.1 through 9.9.4 are omitted.]

9.9.5 ~~D~~Design District Additional Standards

[Paragraphs A through D are omitted.]

SECTION 9

Modify Article 10, Off-Street Parking and Loading, Sec. 10.3, Required Parking, paragraph 10.3.1, Required Motorized Vehicle and Bicycle Parking, paragraph A, Motor Vehicle Parking in Rural, Suburban, and Urban Tiers, paragraph 1, Minimum, Table, and paragraph 2, Maximum Parking Permitted, paragraph a and new paragraph d including paragraphs 1 through 3, paragraph B, Motor Vehicle Parking in Compact Neighborhood Tiers, paragraphs 1 through 4 and commentary, and paragraph 10.3.3, Bicycle Parking in the Downtown Tier, including paragraph B, All Other Uses, and new paragraph C, Residential Uses; Sec. 10.4, Design Standards, paragraph 10.4.1, In General, paragraph A, Location of Parking, paragraph 3, Compact Neighborhood Tier, new paragraphs a and b, and paragraph 4, Downtown Tier, and paragraph 10.4.2, Parking Space Design Standards, paragraph D, Surfacing, paragraph 2, In All Other Tiers, paragraph a, Required Parking Spaces and DD District Parking Spaces, and paragraph b, Excess Parking Spaces, paragraph 10.4.4, Design Standards for Bicycle Parking, paragraph B, Standards for the Downtown Tier, paragraph 2, Standards for Restaurant and Retail Sales and Service Uses, paragraph c, paragraph 3, Standards for Residential Uses, new commentary; Sec. 10.6, Vehicle Stacking Areas, paragraph 10.6.2, Minimum Number of Spaces, Table Footnote; and Sec. 10.7, Loading Areas, paragraph 10.7.1, Location, as set forth in the strikeouts and underlining below.

Sec. 10.3 Required Parking

10.3.1 Required Motorized Vehicle and Bicycle Parking

A. Motor Vehicle Parking in Rural, Suburban, ~~and~~ Urban, and Compact Neighborhood Tiers

1. Minimum

a. Off-street parking spaces shall be provided for all uses listed below in the amounts specified below. Uses not listed shall be reviewed by the Planning Director, or designee, for a determination of the required spaces. Buildings with multiple uses shall calculate parking based on the standard for each use in the building, but bicycle parking shall in any case meet the highest minimum standard for the uses.

b. For sites within the CI District, in any tier, the required number of motorized and bicycle parking shall be equal to the requirements for the Compact Neighborhood Tier, as found in the table below and in

paragraph 10.3.1B, Motor Vehicle Parking in the Compact Neighborhood Tiers. Other standards, such as location and design, shall follow the standards of the tier in which the site is located.

Use Category	Specific Use	Rural, Suburban, and Urban Tiers Minimum Motor Vehicle Spaces	Compact Neighborhood Tier Minimum Motor Vehicle Spaces	Minimum Bicycle Parking, except in the Downtown and Compact Neighborhood Tiers
AGRICULTURAL USES				
Agriculture	All agriculture	1 per site + 1 per 1,000 SF enclosed floor area	0.8 per site + 1 per 1,200 SF of enclosed floor area	No spaces required
RESIDENTIAL USES				
Household Living	All household living	2 per unit	1 per bedroom, but no more than 2 per unit	Multifamily: 1 per 10 units
Group Living	All group living, except as listed below	1 per 4 beds	0.8 per 4 beds	Dormitories: 1 per 10 beds
	Boarding house, rooming house	1 per bedroom	0.8 per bedroom	1 per 3 bedrooms
	Congregate living facility	1 per 2 units + 1 per 4 employees	0.8 per 2 units + 1 per 5 employees	1 per 20 employees, minimum 2 spaces
PUBLIC AND CIVIC USES				
Community Service	All community service	1 per 500 SF floor area	1 per 600 SF floor area	1 per 5,000 SF floor area, minimum 2 spaces
	Auditoriums	1 per 200 SF floor area available for seating in places of assembly, minimum 20 spaces	1 per 240 SF floor area available for seating in places of assembly, minimum 16 spaces	1 per 2,000 SF floor area available for seating in places of assembly, minimum 2 spaces
	Clubs and lodges	1 per 100 SF floor area	1 per 120 SF floor area	1 per 5,000 SF floor area
	Museums	1 per 300 SF floor area, minimum 10 spaces	1 per 360 SF floor area, minimum 8 spaces	1 per 3,000 SF floor area, minimum 2 spaces
Day Care	All day care	1 per employee + 1 per each 10 attendees	0.8 per employee + 1 per each 12 attendees	2% of required MV parking
Educational Facilities	All educational facilities, except as listed below	6 per classroom + 1 per 300 SF floor area of administrative office space	4.8 per classroom + 1 per 360 SF floor area of administrative office space	1 per classroom
	Kindergarten, elementary, middle school	1 per classroom + 1 per 300 SF floor area of administrative office space	0.8 per classroom + 1 per 360 SF floor area of administrative office space	1 per classroom
	College or University	As determined by the Development Review Board	As determined by the Development Review Board	As determined by the Development Review Board
Government Facilities	City, county, state or federal government office	1 per 300 SF floor area + 1 per 3 employees	1 per 360 SF floor area + 0.8 per 3 employees	1 per 3,000 SF floor area + 1 per 30 employees , minimum 4 spaces
	Correctional facilities, jail, prison	1 per 300 SF office area + 1 per 5 beds	1 per 360 SF office area + 1 per 6 beds	1 per 5,000 SF office area, minimum 4 spaces
	Emergency services, fire, sheriff or medical station	1 per employee per shift + 1 per facility vehicle	0.8 per employee per shift + 0.8 per facility vehicle	1 per 8 employees per shift
Medical Facilities	All medical facilities, except as listed below	1 per 250 SF floor area	1 per 300 SF floor area	1 per 5,000 SF floor area, minimum 2 spaces
	Medical laboratory	1 per 500 SF floor area	1 per 600 SF floor area	1 per 10,000 SF floor area, minimum 2 spaces
	Hospital	1 per 2 beds + 1 per doctor and nurse + 1 per 4 employees	0.8 per 2 beds + 0.8 per doctor and nurse + 0.8 per 4 employees	1 per 20 employees
Parks and Open Areas	All parks and open areas except as listed below	As determined by the Planning Director in consultation with the Parks and Recreation Director	As determined by the Planning Director in consultation with the Parks and Recreation Director	20% of provided motor vehicle parking, minimum 4 spaces
	Cemetery, mausoleum columbaria, memorial garden	1 per 5 seats in the chapel or assembly area	1 per 6 seats in the chapel or assembly area	No spaces required

Use Category	Specific Use	Rural, Suburban, and Urban Tiers Minimum Motor Vehicle Spaces	Compact Neighborhood Tier Minimum Motor Vehicle Spaces	Minimum Bicycle Parking, except in the Downtown and Compact Neighborhood Tiers
Passenger Terminals	All passenger terminals	1 per 200 SF waiting floor area + 1 per 2 employees	1 per 240 SF waiting floor area + 0.8 per 2 employees	10% of required MV parking. Minimum 8 spaces. Parking must be covered.
Places of Worship	All places of worship	1 per 28 SF available for seating in the assembly area(s)	1 per 34 SF available for seating in the assembly area(s)	5% of provided motor vehicle parking
Social Service Institutions	All social service institutions, except as listed below	1 per 1,500 SF floor area + 1 per employee/volunteer	1 per 1,800 SF floor area + 0.8 per employee/volunteer	1 per 5,000 SF floor area , minimum 2 spaces
Utilities	All utilities, except as listed below	1 per 1,000 SF enclosed floor area	1 per 1,200 SF enclosed floor area	2 spaces, where motor vehicle parking is required
	TV/HDTV/AM/FM broadcast facility	1 per 300 SF enclosed floor area	1 per 360 SF enclosed floor area	1 per 10,000 SF enclosed floor area
COMMERCIAL USES				
Indoor Recreation	All indoor recreation, except as listed below	1 per 250 SF enclosed floor area	1 per 300 SF enclosed floor area	1 per 2,500 SF enclosed floor area, minimum 2 spaces
	Adult establishment, bar, nightclub, movie or theater	1 per 100 SF of seating area	1 per 120 SF of seating area	Movie or Theatre: 1 per 1,000 SF of seating area Others: 1 per 2,000 SF floor area , minimum 2 spaces
Outdoor Recreation	All outdoor recreation, except as listed below	1 per 500 SF of enclosed floor area + 1 per 1,000 SF of outdoor use area	1 per 600 SF of enclosed floor area + 1 per 1,200 SF of outdoor use area	10% of required motor vehicle parking, minimum 4 spaces
	Campground, summer camp	1 per campsite + 1 per employee	0.8 per campsite + 0.8 per employee	5% of required MV parking
	Circus ground	1 per 600 SF of the area devoted to the circus, arcade, concessions, etc.	1 per 720 SF of the area devoted to the circus, arcade, concessions, etc.	2% of required MV parking
	Flea market, outdoor	1 per 300 SF vendor area	1 per 360 SF vendor area	5% of required MV parking
	Firing range, outdoor such as rifle range, archery, skeet, handgun	Min 5 + 1 per firing position	Min 4 + 0.8 per firing position	No spaces required
	Golf course, country club (see "restaurants" for additional parking requirements associated with eating facilities)	4 per hole + 1 per 500 SF floor area	3.2 per hole + 1 per 600 SF floor area	5% of required MV parking
	Stadium or arena, commercial amphitheater, ballfield	1 per 4 seats	1 per 5 seats	1per 30 seats, minimum 4 spaces, maximum 50 spaces.
Overnight Accommodations	All overnight accommodations, except as listed below	1.25 per room+ 1 per 100 SF conference/banquet/restaurant	1 per room + 1 per 120 SF conference/banquet/restaurant	1 per 15 rooms + 1 per 2,000 SF conference/banquet/restaurant
	Bed and breakfast establishment	1 per guest room + 2 per owner/manager	0.8 per guest room + 1.6 per owner/manager	No spaces required
	Diet house, emergency shelter	1 per 250 SF floor area	1 per 300 SF floor area	1 per 2,500 SF floor area
Restaurants	All restaurants, except as listed below	1 per 100 SF	1 per 120 SF	1 per 2,000 SF floor area, minimum 2 spaces
Retail Sales and Service	All retail sales and service, except as listed below	1 per 200 SF floor area for the first 50,000 SF of Gross Leaseable Area and 1 per 250 SF of leaseable area after that	1 per 240 SF floor area for the first 50,000 SF of Gross Leasable Area and 1 per 300 SF of leasable area after that	1 per 5,000 SF floor area, minimum 4 spaces
	Animal hospital, kennel, or veterinarian	1 per 250 SF enclosed floor area	1 per 300 SF enclosed floor area	1 per 10,000 SF floor area, minimum 2 spaces
	Artist gallery, bulk mailing service, psychic, medium, security service, studio, taxidermist	1 per 400 SF floor area	1 per 480 SF floor area	1 per 10,000 SF floor area, minimum 2 spaces Security service, taxidermist: No spaces required

Use Category	Specific Use	Rural, Suburban, and Urban Tiers Minimum Motor Vehicle Spaces	Compact Neighborhood Tier Minimum Motor Vehicle Spaces	Minimum Bicycle Parking, except in the Downtown and Compact Neighborhood Tiers
	Repair-oriented services such as appliance, bicycle, canvas product, clock, computer, gun, jewelry, musical instrument, office equipment, radio, shoe, television or watch repair, locksmith, tailor, milliner, upholsterer	1 per 500 SF floor area	1 per 600 SF floor area	1 per 10,000 SF floor area, minimum 2 spaces
Self-Service Storage	All self-service storage	Min. 5 or 1 per 100 storage units, whichever is greater	Min. 4 or 1 per 120 storage units, whichever is greater	Min. 2 or 1 per 750 storage units, whichever is greater
Vehicle Sales and Service	All vehicle sales and service, except as listed below	3 per service bay	2.4 per service bay	1 per 20 employees, minimum 2 spaces
	Car wash	2 per wash bay	1.6 per wash bay	1 per 20 employees, minimum 2 spaces
	Vehicle sales, leasing or rental; manufactured housing sales	1 per 500 SF enclosed floor area	1 per 600 SF enclosed floor area	1 per 20 employees, minimum 2 spaces
OFFICE USES				
Office	All office uses, except as listed below	1 per 250 SF floor area	1 per 300 SF floor area	1 per 5,000 SF floor area, minimum 2 spaces
	Conference center, retreat house	1 per 250 SF seating area	1 per 300 SF seating area	1 per 5,000 SF seating area, minimum 2
INDUSTRIAL USES				
Heavy Industrial	All heavy industrial	1 per 1,000 SF enclosed floor area	1 per 1,200 SF enclosed floor area	2 spaces required
	Wrecking, junk or salvage yard	1 + 1 per 10,000 SF of yard area	0.8 + 1 per 12,000 SF of yard area	2% of required MV parking
Light Industrial Service	All light industrial service	1 per 1,000 SF floor area	1 per 1,200 SF floor area	1 per 20,000 SF floor area, minimum 2
Resource Extraction	All resource extraction	1 per 2 employees, minimum 3	0.8 per 2 employees, minimum 2	2 spaces required
Warehouse and Freight Movement	All warehouse and freight movement	1 per 5,000 SF of floor area	1 per 6,000 SF of floor area	2% of required MV parking, minimum 2 spaces
Waste-Related Service	All waste-related services	1 per 500 SF enclosed floor area + 1 per 5,000 SF outside storage area	1 per 600 SF enclosed floor area + 1 per 6,000 SF outside storage area	2 spaces required
Wholesale Trades	All wholesale trade	1 per 1,000 SF floor area	1 per 1,200 SF floor area	1 per 20,000 SF floor area, minimum 2 spaces

2. Maximum Parking Permitted

a. In the Rural, Suburban, and Urban Tiers, n~~N~~o use shall provide more than 175% of the required parking shown in the table above unless any parking above the 175% threshold is pervious or is provided through use of structured parking.

b. No use, except Universities and Colleges, as defined in Sec. 16.3, Defined Terms, and Passenger Terminals, shall require more than 100 bicycle parking spaces.

c. Where a project is intended to be developed in phases, the Development Review Board may approve development of a parking area intended to serve current and future development.

d. In the Compact Neighborhood Tier, the following additional standards shall apply:

(1) No use shall provide more than the minimum motor vehicle spaces shown for the Rural, Suburban, and Urban Tiers in the table in paragraph 10.3.1A.1, Minimum;

(2) Any change of use within an existing building in the Pedestrian Business sub-district of the CD District or within the CI District shall be exempt from off-street motor vehicle and bicycle parking requirements. New buildings or expansion areas of existing buildings within these districts shall be required to meet all off-street motor vehicle and bicycle parking requirements.

(3) For every twenty-three (23) contiguous feet of street frontage for which there is adjacent permitted on-street parking, excluding handicapped accessible spaces, minimum required motor vehicle off-street parking shall be reduced by one (1) space. Credit for on-street parking shall only be counted towards one of the uses in any multi-use development.

~~**B. Motor Vehicle Parking in Compact Neighborhood Tiers**~~

~~**1.** The minimum motor vehicle parking requirement shall be 85% of the parking standards shown in the table in Sec. 10.3.1A.1, Minimum [Rural, Suburban, and Urban Tiers], except as otherwise authorized under this Ordinance.~~

~~**2.** No use shall provide more than 100% of the minimum motor vehicle spaces shown in the table in Sec. 10.3.1A.1, Minimum [Rural, Suburban, and Urban Tiers].~~

~~**3.** Any change of use within an existing building in the Pedestrian Business district of a Compact Neighborhood Regulating Plan, upon adoption of such district, shall be exempt from off-street motor vehicle parking requirements. New buildings or expansion areas of existing buildings within the Pedestrian Business district shall be required to meet all off-street motor vehicle parking requirements.~~

~~**4.** For every twenty-three (23) contiguous feet of street frontage for which there is adjacent permitted on-street parking, excluding handicapped accessible spaces, minimum required motor vehicle off-street parking shall be reduced by one (1) space. Credit for on-street parking shall only be counted towards one of the uses in any multi-use development. Credit shall not be given for a partial space.~~

Commentary: *On-street parking used to reduce off-street parking is within the public right-of-way and shall remain available for general use subject to public parking standards.*

Commentary: *Loading zones and taxi stands shall not be considered permitted on-street parking for purposes of paragraph~~Sec.~~ 10.3.1B.4.*

[Paragraph C is omitted.]

[Paragraphs 10.3.2 and 10.3.4 are omitted.]

10.3.3 Bicycle Parking in the Downtown ~~Tier~~ and Compact Neighborhood Tiers

Uses within the Downtown and Compact Neighborhood Tiers shall provide bicycle parking based on the category and square footage of each use.

A. Restaurant and Retail Sales and Services

Restaurant and retail sales and services use categories shall provide bicycle parking at a minimum rate of one bicycle parking space per 1,000 square feet of usable floor area.

B. All Other Non-Residential Uses

~~**1.**~~ For all non-residential uses of 10,000 square feet or more, bicycle parking shall be provided at a minimum rate of one bicycle parking space per ~~5,000~~2,500 square feet of usable floor area, with a minimum requirement of 2 parking spaces.

C. Residential Uses

~~**2.**~~ For all residential development, bicycle parking shall be provided at a minimum rate of one bicycle parking space per dwelling unit.

Sec. 10.4 Design Standards

10.4.1 In General

A. Location of Parking

[Paragraphs 1 and 2 are omitted.]

3. Compact Neighborhood and Downtown Tiers

a. In all districts within the Compact Neighborhood Tier and the Downtown Tier, surface parking shall be located adjacent to a street only if, in addition to landscaping materials required pursuant to Sec. 9.8~~.2~~, Vehicular Use Area ~~Perimeter~~ Landscaping, a wall or decorative fence consistent with the requirements of Sec. 9.9, Fences and Walls, with a minimum height of 30 inches is provided at the build-to line established pursuant to Sec. 6.12, Design Districts, or in a location no further from the right-of-way than the maximum street yard established pursuant to paragraph~~Sec.~~ 6.10.1, Nonresidential Development Standards, whichever is applicable.

b. When the required wall or fence is located within a sight distance triangle, the minimum height shall be 24 inches to reduce impediments to traffic visibility.

~~**4. Downtown Tier**~~

~~In the Downtown Tier, surface parking shall be located adjacent to a street only if, in addition to the requirements of Sec. 9.8.4, Vehicular Use Area Landscaping within the DD District, a wall or decorative fence consistent with the requirements of Sec. 9.9, Fences and Walls, with a minimum height of 30 inches is provided at the build-to line established pursuant to Sec. 6.12.3D.1, Building Placement.~~

[Paragraphs B and C are omitted.]

10.4.2 Parking Space Design Standards

Each required off-street parking space shall open directly onto an aisle or driveway which is designed to provide safe and efficient access to each parking space. Parking shall not be allowed to impede traffic movement on alleys or streets or to impede pedestrian or bicycle access.

[Paragraphs A through C are omitted.]

D. Surfacing

[Paragraph 1 is omitted.]

2. In All Other Tiers

a. Required Parking Spaces and Downtown Tier~~D~~ ~~District~~ Parking Spaces

All required off-street parking spaces, and all off-street parking spaces in the Downtown Tier~~D District~~, except for those associated with single-family dwellings, shall be paved in accordance with standards and specifications of the City Public Works Department.

b. Excess Parking Spaces

All off-street parking spaces in excess of required spaces~~ or DD District spaces~~, except for those associated with single-family dwellings, shall be covered with an all-weather surface designed to support anticipated loads. Loose material surfaces shall be contained with a permanent edging. The surface shall be maintained so that traffic may move safely in and out of the parking area.

[Paragraph 10.4.3 is omitted.]

10.4.4 Design Standards for Bicycle Parking

[Paragraphs A and C are omitted.]

B. Standards for the Downtown Tier and Design Districts within Other Tiers

[Paragraphs 1 and 4 are omitted.]

2. Standards for Restaurant and Retail Sales and Service Uses

[Paragraphs a and b are omitted.]

c. In order to reduce streetscape clutter and provide greater visibility for bicycle parking areas, ~~The Planning Director or designee may permit alternative bicycle parking locations within the blockface such as~~ clustered~~ing~~ ~~or shared~~ facilities~~,~~ may be provided~~,~~ when located a maximum of 100 feet from the primary building entrance so long as they remain within the blockface.~~that the following findings are made:~~

~~(1) Streetscape clutter is reduced;~~

~~(2) Pedestrian clear zones are maintained; and~~

~~(3) Higher accessibility and visibility are provided.~~

3. Standards for Residential Uses

Required residential bicycle parking may only be provided internal to the dwelling unit if a designated bicycle storage space is provided.

Commentary: *Residential bicycle parking may be provided within the residential unit or in a designated bike storage area.*

Sec. 10.6 Vehicle Stacking Areas

[Paragraphs 10.6.1 and 10.6.3 are omitted.]

10.6.2 Minimum Number of Spaces

Off-street stacking spaces shall be provided as follows:

Activity type	Minimum stacking spaces in ~~the D~~Design Districts	Minimum stacking spaces in all other districts	Measured from the stacking lane entry to the following point of service:
Automated teller machine (drive-up)	1	3	Teller machine
Bank teller lane	n/a[1]	4	Teller or window
Car wash bay, full-service	n/a[1]	6	Bay
Car wash bay, self-service	n/a[1]	3	Bay
Dry cleaning/laundry drive-through	n/a[1]	3	Cleaner/laundry window
Gasoline fueling	2	2	Fueling position
Gatehouse, staffed	2	4	Gatehouse
Gate, unstaffed	1	2	Gate
Pharmacy pick-up	n/a[1]	3	Pharmacy window
Restaurant drive-through with combined order/pick-up window(s)	n/a[1]	6 per window	Order/pick-up window
Restaurant drive-through with separate order point(s) and pick-up window(s)	n/a[1]	4 in addition to either	Each pick-up window
	n/a[1]	6	Order point closest to stacking lane entry for each undivided order lane
		or	
	n/a[1]	4	Order point closest to stacking lane entry for each divided order lane
Valet parking	2	3	Valet stand
Other	Determined by Development Review Board in consideration of an approved study prepared by a registered engineer with expertise in Transportation Engineering.		

[1] An existing non-conforming use in ~~the D~~Design Districts shall comply with the minimum stacking space requirement for all other districts.

A minimum stacking space number includes the space at the point of service. A drive-through facility with unspecified activity type shall comply with the most stringent stacking requirement(s) applicable in the zoning district in which the facility is located as determined by the Planning Director.

Sec. 10.7 Loading Areas

10.7.1 Location

No loading spaces shall be located within 30 feet of street intersections or in any required yard space, except in the CI District and Design~~D~~ Districts where the required distance shall be 20 feet. Street intersections shall be measured from the back of the predominant curbline (not including bulb outs) or future curbline where no curb currently exists~~back-of-curb~~.

[Paragraphs 10.7.2 through 10.7.9 are omitted.]

SECTION 10

Modify Article 11, Sign Standards, Sec. 11.8, Elements of a Common Signage Plan, paragraph 11.8.2, Applicability; Article 13, Additional Requirements for Subdivisions, Sec. 13.4, Block Standards, paragraph 13.4.2, paragraph B; Sec. 13.6, Street Connectivity Requirements, paragraph 13.6.1, Connectivity Defined, paragraph A and paragraph B, Connectivity in the DD District; Article 14, Nonconformities, Sec. 14.4, Nonconforming Improvements and Structures, paragraph 14.4.1, Nonconforming Buildings or Structures, paragraph B, paragraph 5; Article 16, Definitions, Sec. 16.2, Abbreviations; and Sec. 16.3, Defined Terms, as set forth in the strikeouts and underlining below.

Sec. 11.8 Elements of a Common Signage Plan

[Paragraphs 11.8.1, 11.8.3, and 11.8.4 are omitted.]

11.8.2 Applicability

The requirements of a common signage plan shall apply to all businesses within a related project (as evidenced by a common development plan or site plan), even if the properties are subdivided, except in ~~the D~~Design Districts, where no common signage plan shall be required.

Sec. 13.4 Block Standards

[Paragraph 13.4.1 is omitted.]

13.4.2 Subdivision of property greater than two contiguous acres in size within ~~the D~~Design Districts shall meet the following block standards:

[Paragraphs A and C through F are omitted.]

B. Each block shall be a minimum of one acre and a maximum of 3.5 acres in size, except that a block that is greater than 3.5 acres but less than 5 acres in size shall be allowed if a pedestrian mall under paragraph~~Sec.~~ 6.12.2E.1~~3D.3~~, Pedestrian Mall Standards, or a public alley approved by the Public Works director or designee is provided in lieu of right-of-way to create de facto blocks that meet the size requirements of this section;

Sec. 13.6 Street Connectivity Requirements

[Introductory paragraph is omitted.]

13.6.1 Connectivity Defined

A. Except in ~~the D~~Design Districts, connectivity shall be defined by the ratio of links to nodes in any subdivision.

[Paragraphs 1 through 3 are omitted.]

B. Connectivity in ~~the D~~Design Districts

[Paragraphs 1 and 2 are omitted.]

[Paragraphs 13.6.2 and 13.6.3 are omitted.]

Sec. 14.4 Nonconforming Improvements and Structures

[Introductory paragraph is omitted.]

14.4.1 Nonconforming Buildings or Structures

[Paragraphs A and C are omitted.]

B. Construction or improvements to existing nonconforming buildings and structures, with the exception of those listed below, may be undertaken only through the issuance of a minor special use permit, which may be granted with any conditions deemed appropriate by the Board of Adjustment. No enlargement or improvement shall have the effect of increasing the degree or extent of a nonconforming feature. Construction and improvements that shall not require a minor special use permit are:

[Paragraphs 1 through 4 are omitted.]

5. Enlargement of up to 30% of buildings in the ~~D~~Design Districts, as long as the degree or extent of the nonconforming feature is not increased; or

[Paragraphs 6 and 7 are omitted.]

[Paragraphs 14.4.2 through 14.4.4 are omitted.]

Sec. 16.2 Abbreviations

CD: Compact Design
CD-C: Compact Design – Core
CD-P: Compact Design – Pedestrian Business
CD-S1: Compact Design – Support 1
CD-S2: Compact Design – Support 2

Sec. 16.3 Defined Terms

Alternative Form of Compliance: A form of compliance that equals or exceeds an applicable standard and is subject to approval as defined in the Unified Development Ordinance.

Bay: Vertical divisions of the exterior facade, as marked by architectural features such as: columns, pilasters, groups of windows, or other architectural elements.

Build-to Line: The line a set distance from the back of curb establishing the required building location. Build-to lines shall be measured from the predominant curbline (not including bulb outs) or future curbline where no curb currently exists.

Corner Tower Element: A corner tower element is an accentuated vertical element located on a building corner at a street intersection allowed to be taller than the rest of the building.

Pedestrian Mall: A public or private, improved area intended for public pedestrian and non-motor use that is permanently preserved for such use through limited easements or rights of enforcement granted to the City, or other similar legal techniques.

Storefront Window System: An architectural wall assembly of large glass panes framed in relatively thin metal members and typically used at the ground level of commercial buildings.

Yard, Street: That portion of a yard extending between the edge of the street right-of-way (or easement, for private streets) and the required building placement ~~street setback~~; the portion of a lot adjoining a street as measured from the right-of-way. The street yard width is measured perpendicular to the street right-of-way. Corner lots and through lots shall be considered to have two street yards. A street yard does not exist adjacent to an alley.

SECTION 11

That the Unified Development Ordinance shall be renumbered as necessary to accommodate these changes and clarifications.

SECTION 12

That this amendment of the Unified Development Ordinance shall become effective upon adoption. Any site plan submitted prior to the adoption date of this ordinance may be reviewed and approved under the regulations in place at the time of submittal.