1010 NORTH MIAMI BLVD.
DURHAM, NORTH CAROLINA

STATE SITE CODE: 32-0135
CSD PROJECT NUMBER: MCD-0708
MAJOR SPECIAL USE CASE # M1100003

SITE PLAN AND CONSTRUCTION DRAWINGS

VICINITY MAP

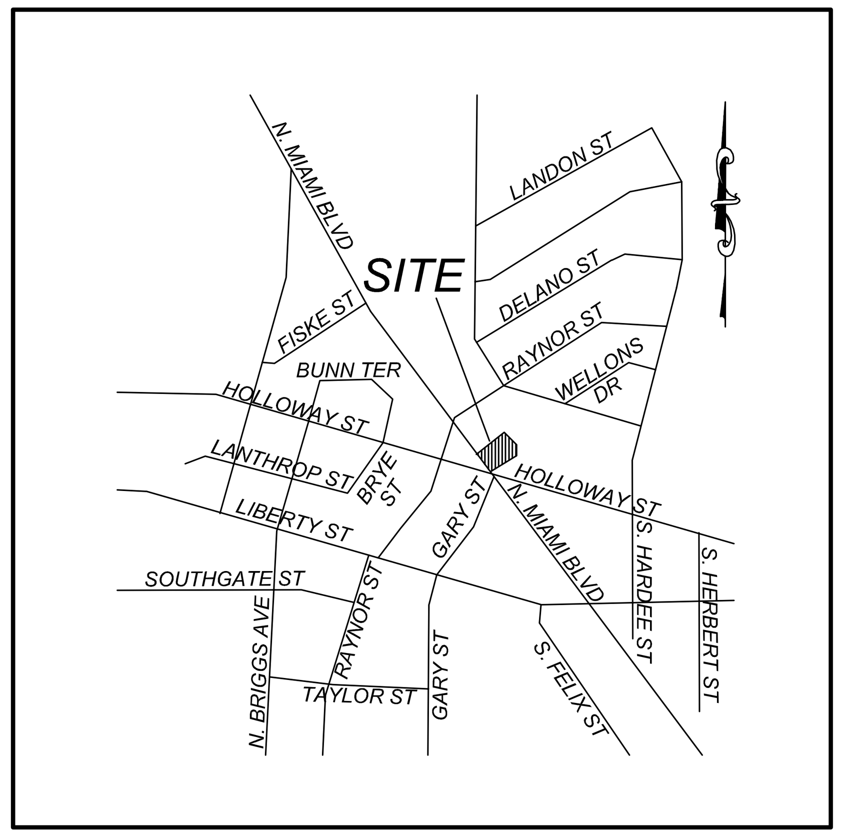

STANDARD EROSION CONTROL NOTES:

1. IF MORE THAN 12,000 SF OF AREA IS DISTURBED, A LAND-DISTURBING PERMIT WILL BE REQUIRED PRIOR TO THE COMMENCEMENT OF ANY LAND-DISTURBING ACTIVITY.
2. IF MORE THAN 20,000 SF IS DISTURBED, A SEDIMENTATION AND EROSION CONTROL PLAN MUST BE SUBMITTED AND APPROVED PRIOR TO THE ISSUANCE OF A LAND-DISTURBANCE PERMIT.
3. IF MORE THAN 5 ACRES IS DITURBED, A SURETY WILL BE REQUIRED.
4. IF TREE PROTECTION IS REQUIRED BY THE CITY / COUNTY PLANNING DEPARTMENT, TREE PROTECTION CERTIFICATION MUST SUBMITTED TO THE DURHAM COUNTY EROSION CONTROL DIVISION, AND TREE PROTECTION INSPECTION COMPLETED PRIOR TO THE ISSUANCE OF A LAND-DISTURBANCE PERMIT.
5. IF AN OFF-SITE SOIL SPOIL OR BORROW SITE IS UTILIZED, THEN THE DISTURBED AREA FOR THE SPOIL / BORROW SITE MUST BE INCLUDED IN THE LAND-DISTURBANCE PLAN AND PERMIT UNLESS THE SPOIL / BORROW SITE ALREADY HAS A LAND-DISTURBANCE PERMIT.

DURHAM SITE DATA

NAME OF DEVELOPMENT:	McDONALD'S @ WELLONS VILLAGE
SITE ADDRESS:	1010 NORTH MIAMI BOULEVARD
PIN NUMBER/TAX MAP NUMBER:	0831-12-86-7423 & 0831-12-96-2562
OWNER / DEVELOPER/APPLICANT:	McDONALD'S USA, LLC 4601 SIX FORKS ROAD SUITE 200 RALEIGH, N.C. 27609 TELEPHONE: (919) 876-9716 FAX: (919) 326-4215
DESIGNER:	COMMERCIAL SITE DESIGN, PLLC 8312 CREEDMOOR ROAD RALEIGH, NORTH CAROLINA 27613 CONTACT: BRIAN SOLTZ PH.: (919) 848-6121, FAX: (919) 848-3741 SOLTZ@CSITEDESIGN.COM
ZONING & WATERSHED:	CC (COMMERCIAL CENTER) F/J-B WATERSHED
DEVELOPMENT TIER:	URBAN TIER
RIVER BASIN:	NEUSE
EXISTING USE:	FAST FOOD RESTAURANT W/DRIVE-THRU
PROPOSED USE:	FAST FOOD RESTAURANT W/ DRIVE-THRU
BUILDING SETBACKS: RIGHT-OF-WAY .... SIDE .... REAR	 50 FEET NONE NONE
PARKING REQUIREMENTS:	1 SPACE PER 100 SF OF GFA 4,500 SF / 100 = 45 SPACES 45 SPACES REQUIRED (McDONALDS)
PARKING PROVIDED:	SEE OVERALL SHOPPING CENTER PLAN (SHEET C-3a) FOR TOTAL PARKING PROVIDED
BICYCLE PARKING:	1 SPACE PER 2,000 SF 4,500 / 2,000 = 3 SPACES 2-U RACKS PROVIDED = 4 SPACES
McDONALD'S SITE AREA: PROJECT AREA: DISTURBED AREA: EXISTING IMPERVIOUS AREA: PROPOSED IMPERVIOUS AREA:	36,402 SF OR 0.84 ACRES 57,905 SF OR 1.33 ACRES 59,464 SF OR 1.37 ACRES 51,179 SF OR 1.17 ACRES 42,088 SF OR 0.97 ACRES
PROPOSED PAVEMENT AREA:	16,651 SF
EXISTING BUILDING AREA:	3,859 SF
PROPOSED BUILDING AREA:	4,500 SF
FLOOR AREA RATIO:	4,500 SF / 36,402 SF = 0.123
WATER & SEWER:	CITY OF DURHAM
TREE COVERAGE REQUIRED:	NOT REQUIRED
TREE COVERAGE PROVIDED:	NOT REQUIRED
BUILDING HEIGHT:	20 FEET
MAX. BUILDING HEIGHT:	50 FEET

FLOOD PLAIN STATEMENT FROM DESIGN ENGINEER

I W.BRIAN BURCHETT, PE DO CERTIFY TO THE BEST OF MY KNOWLEDGE, THAT THE PROPOSED DESIGN WITHIN THIS PLAN SET COMPLIES WITH ALL PROVISIONS OF THE DURHAM FLOOD PLAIN AND DAMAGE PROTECTION STANDARDS IN EFFECT AT TIME OF CITY COUNCIL APPROVAL OF THE MAJOR SPECIAL USE PERMIT.

NOTE: CITY OF DURHAM STANDARDS AND SPECIFICATIONS ARE TO BE USED.

CONTACTS:

ZONING:
DURHAM CITY/COUNTY PLANNING DEPT.
101 CITY HALL PLAZA, BASEMENT LEVEL DURHAM, NORTH CAROLINA 27701
CONTACT: TERRI DANNER
PHONE: (919) 560-4137

SIGNAGE:
DURHAM CITY / COUNTY INSPECTIONS DEPT.
101 CITY HALL PLAZA
DURHAM, NORTH CAROLINA 27701
CONTACT: GENE BRADHAM
PHONE: (919) 560-4677

BUILDING & INSPECTIONS:
DURHAM CITY / COUNTY INSPECTIONS DEPT.
101 CITY HALL PLAZA
DURHAM, NORTH CAROLINA 27701
CONTACT: DON MOORE
PHONE: (919) 560-4677

STREET & HIGHWAY DATA:
NCDOT
CONTACT: MICHAEL GOODWIN
PHONE: (919) 560-6854

WATER:
CITY OF DURHAM PUBLIC WORKS DEPT.
101 CITY HALL PLAZA, 3RD FLOOR
DURHAM, NORTH CAROLINA 27701
CONTACT: ELIZABETH ESBRI
PHONE: (919) 560-4326

STORM SEWER:
CITY OF DURHAM PUBLIC WORKS DEPT.
101 CITY HALL PLAZA, 3RD FLOOR
DURHAM, NORTH CAROLINA 27701
CONTACT: JAKE CHANDLER
PHONE: (919) 560-4326

SANITARY SEWER:
CITY OF DURHAM PUBLIC WORKS DEPT.
101 CITY HALL PLAZA, 3RD FLOOR
DURHAM, NORTH CAROLINA 27701
CONTACT: ELIZABETH ESBRI
PHONE: (919) 560-4326

FIRE:
TOM DARLING
CITY OF DURHAM FIRE DEPT.
(919) 560-1199

HVAC:
DURHAM CITY / COUNTY INSPECTIONS DEPT. 101 CITY HALL PLAZA
DURHAM, NORTH CAROLINA 27701
CONTACT: GENE BRADHAM
PHONE: (919) 560-4677

GAS:
RICK MASON
2541 WHILDEN DRIVE
DURHAM, NORTH CAROLINA 27713
PUBLIC SERVICE COMPANY
PHONE: (919) 598-7453

ELECTRIC:
DOUG LONG DUKE POWER
4412 HILLSBORO STREET
DURHAM, NORTH CAROLINA 27705
PHONE: (919) 687-3127

PHONE:
STEVE SECORD
VERIZON CUSTOMER SERVICE
PH. (800) 483-5000
PHONE: (919) 280-7239

HEALTH:
JANE ANDREWS
DURHAM COUNTY HEALTH DEPT.
414 E. MAIN STREET
DURHAM, NORTH CAROLINA 27701
PHONE: (919) 360-7800

CITY OF DURHAM
PUBLIC WORKS DEPARTMENT
APPROVED

ENGINEERING ________________ DATE ________
STORM WATER ________________ DATE ________
TRANSPORTATION ________________ DATE ________
________________ DATE ________
________________ DATE ________

DRAWING INDEX

10th Revision–REMOVE FEE IN–LIEU SIDEWALK 12–06–12	9th Revision–FINAL SITE PLAN REVIEW COMMENTS 10–24–12	8th Revision–MSUP REVIEW COMMENTS #5 10–09–12	7th Revision–MSUP REVIEW COMMENTS #3 08–22–12	6th Revision–REVERT TO ORIGINAL GRADING 06–20–12	5th Revision–MSUP REVIEW COMMENTS #2 & DRB REVIEW #3 04–16–12	4th Revision–MSUP REVIEW COMMENTS #1 02–15–12	3rd Revision–REVISED PER DRB REVIEW #2 11–28–11	2nd Revision–REVISED PER DRB REVIEW #1 07–27–11	1st–PERMIT ISSUE 04–05–11	DWG. NUMBER	DRAWING DESCRIPTION
■	■	■	■	■	■	■	■	■	■	C–1	COVER SHEET
□	□	□	□	■	□	□	■	□	■	C–2	TOPOGRAPHIC SURVEY
□	□	□	□	■	□	□	□	□	■	C–2a	DEMOLITION PLAN
■	■	■	■	■	■	■	■	■	■	C–3	SITE PLAN
□	□	□	□	□	□	□	□	■	□	C–3a	OVERALL SHOPPING CENTER PARKING PLAN
□	□	□	□	■	□	□	□	□	■	C–4	ADA ACCESSIBILITY PLAN AND DETAILS
□	□	□	■	■	■	■	■	■	■	C–5	GRADING PLAN
□	□	□	□	■	□	□	■	□	■	C–5a	EROSION CONTROL PLAN
□	■	□	□	■	■	□	■	■	■	C–5b	OVERALL FLOODPLAIN IMPACT ANALYSIS
□	□	□	■	■	□	□	□	□	□	C–5c	FLOODPLAIN GRADING EXHIBIT
□	□	□	■	■	□	□	□	■	■	C–6	UTILITY PLAN
□	□	□	■	□	□	■	□	□	■	C–7	DETAILS
□	□	□	□	□	□	■	□	□	■	C–8	DETAILS
□	□	□	□	□	□	□	□	■	■	C–9	DETAILS
□	□	■	■	□	□	□	□	□	■	C–10	DETAILS
□	□	□	□	□	□	□	□	□	■	C–11	MENU BOARD DETAILS
□	□	□	□	□	□	□	□	■	■	C–12	SD DETAILS
□	□	□	□	■	□	■	□	□	□	C–13	HANDICAP RAMP CROSS SECTIONS
				OMITTED	■	■	□	□	□	C–14	WALL DETAILS
□	□	■	■	■	■	■	□	□	□	C–15	TRASH CORRAL AND LIGHT POLE BASE DETAILS
□	□	□	□	■	■	■	□	□	□	L–1	LANDSCAPE PLAN
□	□	□	□	■	■	■	□	■	■	L–2	LIGHTING PLAN
□	■	□	■	□	□	■	□	■	■	TC–1	STORAGE BUILDING AND TRASH CORRAL GATE DETAILS
□	□	□	□	□	□	■	□	■	□	A2.0	BUILDING ELEVATIONS
□	□	□	□	□	□	□	□	■	□	A2.1	BUILDING ELEVATIONS
□	□	□	■	□	□	□	□	□	□	P1.2	WASTE, VENT & STORM PIPING

PUBLIC WORKS CONDITIONS OF APPROVAL BOX

1. ALL SIZES, MATERIALS, SLOPES,LOCATIONS, EXTENSIONS AND DEPTHS FOR ALL PROPOSED UTILITIES (WATERLINES, SANITARY SEWER LINES AND STORM DRAINAGE CONVEYANCE SYSTEMS) SHALL BE REVIEWED AT CONSTRUCTION DRAWING SUBMITTAL AND BE SUBJECT TO APPROVAL BY THE CITY OF DURHAM PUBLIC WORKS DEPARTMENT BASED UPON THE DESIGN CRITERIA AND STANDARDS SET FORTH BY HE PUBLIC WORKS DEPARTMENT AND BE SUBJECT TO REVIEW AND APPROVAL BY THE PUBLIC WORKS DEPARTMENT AT CONSTRUCTION DRAWING SUBMITTAL.
2. THE DESIGNING PROFESSIONAL (A NCPE, NCPLS, OR NCPLA-AS REQUIRED) WILL SUBMIT 3 SETS OF CONSTRUCTION DRAWINGS TO CITY ENGINEERING FOR REVIEW AND APPROVAL BEFORE STARTING CONSTRUCTION (SEE CONSTRUCTION PLAN APPROVAL PROCESS). NOTE: THE APPROVAL OF CONSTRUCTION DRAWINGS IS SEPARATE FROM SITE PLAN APPROVAL.
3. BACKFLOW PERMIT REQUIRED WITH THIS PROJECT BEFORE INSTALLATION OF ANY BACKFLOW PREVENTERS OCCUR. CALL CROSS CONNECTION CONTROL AT 560-4194 FOR CITY OF DURHAM REGULATIONS, INSTALLATION REQUIREMENTS AND PERMIT.
4. FOR DEVELOPMENTS REQUIRED TO HAVE A STORM WATER BMP FACILITY:
   A. FINAL DESIGN CALCULATIONS FOR THE STORM WATER BMP FACILITY WILL REQUIRE THE USE OF STORAGE INDICATION ROUTING METHODOLOGY SUCH AS TR-20 OR HEC-1 MODELS. FOR THE BMP FACILITY, PROVIDE STAGE-STORAGE RELATIONSHIP AND INFLOW AND OUTFLOW HYDROGRAPHS. PROVIDE ALL TABULATED DATA INCLUDING CALCULATIONS SHOWING THE OUTLET UNDER ORIFICE CONTROL, BARREL CONTROL AND WEIR CONTROL, AS APPROPRIATE, TO SHOW HOW THE ROUTING WAS DEVELOPED.
   B. AN EXECUTED STORM WATER FACILITY OPERATION AND MAINTENANCE PERMIT AGREEMENT (PREPARED BY STORM WATER SERVICES, CITY OF DURHAM), PAYMENT OF STORM WATER FACILITY PERMIT FEE PER BMP FACILITY AND PERPETUAL SURETY FOR THE CONTINUED OPERATION AND MAINTENANCE OF THE FACILITY IS REQUIRED PRIOR TO CONSTRUCTION PLAN APPROVAL.
   C. AN AS-BUILT CERTIFICATION FOR THE STORM WATER BMP(S), PROVIDED BY THE DESIGN ENGINEER, IS REQUIRED. THE AS-BUILT SHALL BE SUBMITTED PER THE REFERENCE GUIDE FOR DEVELOPMENT, APPROVED BY THE STORM WATER SERVICES DIVISION AND THE BMP(S) SHALL BE INSPECTED AND APPROVED BY THE STORM WATER SERVICES DIVISION PRIOR TO ISSUANCE OF ANY CERTIFICATES OF OCCUPANCY OR CERTIFICATES OF COMPLIANCE FOR THE PROJECT.
   D. A COMPLETED CITY OF DURHAM DESIGN SUMMARY IS REQUIRED FOR EACH STORM WATER BMP FACILITY NO LATER THAN AT THE FIRST CONSTRUCTION DRAWING SUBMITTAL.
   E. STORM WATER BMP FACILITY DESIGN CALCULATIONS WILL NOT BE REVIEWED OR APPROVED WITH THE SITE PLAN / PRELIMINARY PLAT SUBMITTAL. ALL STORM WATER BMP FACILITY DESIGNS WILL BE REVIEWED AND APPROVED DURING THE CONSTRUCTION DRAWING SUBMITTAL PROCESS.
5. AS-BUILT DRAWINGS SHALL BE APPROVED PRIOR TO WATER METER AND SANITARY SEWER SERVICE CONNECTION INSTALLATIONS AND PRIOR ISSUANCE OF A CERTIFICATE OF OCCUPANCY.
6. A COMPLETED STORMWATER FACILITY MAINTENANCE AND OPERATION PERMIT AGREEMENT WITH APPROPRIATE FEES, CALCULATIONS AND DETAILS MUST BE SUBMITTED AT TIME OF CONSTRUCTION PLAN REVIEW. PLANS WILL NOT BE REVIEWED WITHOUT THESE ITEMS. CONTACT STORM WATER SERVICES @ 560-4326 FOR INFORMATION.
7. AN N.C.D.O.T. OR CITY OF DURHAM DRIVEWAY PERMIT IS REQUIRED.
8. THE FOLLOWING ITEMS ARE NOT REQUIRED FOR SITE PLAN APPROVAL BUT ARE ITEMS THAT ARE REQUIRED BEFORE CONSTRUCTION OF WATER, SEWER, STORM DRAINAGE AND STREETS CAN BEGIN. DEVELOPER IS ULTIMATELY RESPONSIBLE TO MAKE CERTAIN THAT THESE ITEMS ARE COMPLETE AND APPROVED.
   A. IF A HYDRANT IS PROPOSED OUTSIDE OF THE RIGHT-OF-WAY A FIRE FLOW ANALYSIS IS REQUIRED. WATERLINE SIZE MAY CHANGE WITH FIRE FLOW ANALYSIS. CONTACT ENGINEERING DESIGN SERVICES AT 560-4326 TO SCHEDULE FLOW TEST OR TO OBTAIN CURRENT SYSTEM DATA
   B. IF A METER 2" OR LARGER IS PROPOSED, CONTACT WATER MANAGEMENT AT 560-4381 PRIOR TO THE CONSTRUCTION OF THE METER VAULT TO VERIFY THE TYPE AND DIMENSIONS OF THE METER
   C. WATER PERMIT REQUIRED.
   D. SEWER PERMIT REQUIRED.
   E. BACKFLOW PREVENTERS ARE REQUIRED FOR THIS PROJECT. BACKFLOW PREVENTER INSTALLER MUST OBTAIN A BACKFLOW PREVENTER PERMIT (ONLINE) PRIOR TO BEGINNING BACKFLOW PREVENTER INSTALLATIONS. CONTACT THE CROSS-CONNECTION CONTROL OFFICE AR 919-560-4194 TO OBTAIN ADDITIONAL INFORMATION AND INSTALLATION REQUIREMENTS. THE CITY OF DURHAM'S BACKFLOW PERMIT FEE IS $50 AND CAN BE APPLIED FOR AT http://www.durhamnc.gov/departments/wm/cross.cfm
   F. AN NCDOT OR CITY OF DURHAM DRIVEWAY PERMIT IS REQUIRED.
   G. ENGINEERING INSPECTIONS NOTES:
      1. A CONSTRUCTION ON CITY RIGHT-OF-WAY / PRIVATE PROPERTY PERMIT MAY BE REQUIRED. CONTACT THE PUBLIC WORKS CUSTOMER SERVICE DESK AT 560-4326.
      2. AN ENCROACHMENT AGREEMENT MAY BE REQUIRED. CONTACT ENGINEERING SERVICES AT 560-4326.
9. A COMPLETED CITY OF DURHAM DESIGN SUMMARY IS REQUIRED FOR EACH DETENTION / WATER QUALITYDEVICE NO LATER THAN AT FIRST SUBMITTAL OF CONSTRUCTION DRAWINGS.
10. AT A MINIMUM, THE STORM WATER DESIGN DETAILS FOR THIS PROJECT SHALL BE GOVERNED BY THE MINIMUM STANDARDS OF THE NOVEMBER 2006 CITY OF DURHAM REFERENCE GUIDE FOR DEVELOPMENT. NON-COMPLIANCE WITH ANY OF THESE MINIMUM STANDARDS SHALL RENDER THE APPROVAL OF SUCH ITEMS NULL AND VOID. IT WILL BE THE RESPONSIBILITY OF THE COWNER TO CORRECT ANY DEFICIENCIES NOTED DURING THE LIFE OF THIS PROJECT TO THE SATISFACTION OFF THE CITY OF DURHAM.

GENERAL CONDITIONS OF APPROVAL

1. UDO SITE LIGHTING NOTE (UDO SECTION 7.4):
   MEASURES SHALL BE PROVIDED TO PREVENT LIGHT SPILL OVER ONTO ADJACENT PROPERTIES AND GLARE TOWARD MOTOR VEHICLE OPERATORS AND SHALL BE INDICATED ON THE SITE PLAN. EXTERIOR LIGHTS SHALL BE SHIELDED SO THAT THEY DO NOT CAST DIRECT LIGHT BEYOND THE PROPERTY LINE. IN ACCORDANCE WITH THESE STANDARDS:
   A. THE MAXIMUM ILLUMINATION AT THE EDGE OF PROPERTY LINE ADJACENT TO RESIDENTIAL ZONING IS
   B. THE MAXIMUM ILLUMINATION AT THE EDGE OF THE PROPERTY LINE ADJACENT TO NON-RESIDENTIAL ZONING IS 5.0 FOOT CANDLES.
   C. THE MAXIMUM ILLUMINATION AT THE EDGE OF THE PROPERTY LINE ADJACENT TO A STREET IS 5.0 FOOT CANDLES.
   D. THE LEVEL OF ILLUMINATION AS MEASURED IN FOOT CANDLES AT ANY ONE POINT SHALL MEET THE STANDARDS IN THE TABLE IN UDO SECTION 7.4.3A WITH MINIMUM AND MAXIMUM LEVELS MEASURED ON THE PAVEMENT WITHIN THE LIGHTED AREA.
   E. THE MAXIMUM HEIGHT FOR DIRECTIONAL OR FULL CUT-OFF LIGHTING FIXTURES (FIXTURES DESIGNED TO INSURE THAT NO LIGHT IS EMITTED ABOVE A HORIZONTAL LINE PARALLEL TO THE GROUND) SHALL BE 30 FEET ABOVE GRADE.
   F. THE MAXIMUM HEIGHT FOR NON-DIRECTIONAL LIGHTING FIXTURES, WHICH ARE DEFINED AS FIXTURES DESIGNED TO ALLOW LIGHT TO BE EMITTED ABOVE A HORIZONTAL LINE PARALLEL TO THE GROUND, SHALL BE 15 FEET ABOVE GRADE. THIS MUST BE VERIFIED BY FIELD SURVEY (BY USE OF PHOTOMETRIC SURVEY) PRIOR TO THE CERTIFICATE OF COMPLIANCE BEING ISSUED. ALL OF THIS INFORMATION, INCLUDING DETAILS WILL BE REQUIRED ON BUILDING PLANS PRIOR TO ISSUANCE OF BUILDING PERMIT.
2. ALL LANDSCAPING MUST BE IN PLACE PRIOR TO REQUEST FOR A CERTIFICATE OF COMPLIANCE. CONTACT DURHAM CITY/COUNTY PLANNING DEPARTMENT SITE INSPECTION STAFF FOR INSPECTION.
3. EACH LANDSCAPING COMPLIANCE INSPECTION AFTER THE INITIAL INSPECTION WILL INCUR A RE-INSPECTION FEE, STARTING AT $100 + 4% TECHNOLOGY SURCHARGE. EACH SUBSEQUENT RE-INSPECTION WILL INCREASE BY $100 + 4% (EXAMPLE 1st - $104, 2nd - $208, 3rd - $312, ETC.) PAYMENT MUST BE RECEIVED BY THE DURHAM CITY COUNTY PLANNING DEPARTMENT PRIOR TO RE-INSPECTION.
4. A COPY OF THE APPROVED SITE PLAN MUST BE ON SITE AND AVAILABLE FOR PERIODIC INSPECTION AND USE DURING CONSTRUCTION TO EVALUATE COMPLIANCE WITH THE APPROVED SITE PLAN. REQUIRED INSPECTIONS WILL NOT TAKE PLACE IF THE JOB SITE COPY IS NOT AVAILABLE AND RE-INSPECTION FEES WILL BE CHARGED.
5. TREE PROTECTION NOTE (UDO SECTION 8.3.2E):
   TREE PROTECTION FENCING MUST BE IN PLACE PRIOR TO ANY DEMOLITION, LAND DISTURBANCE, OR ISSUANCE OF A GRADING PERMIT AND SHALL INCLUDE WARNING SIGNS POSTED IN BOTH ENGLISH AND SPANISH, AS FOLLOWS: "NO TRESPASSING / TREE PROTECTION AREA / PROHIBIDO ENTRANCE / ZONE PROTECTOR PARA LOS ARBOLES."
6. ROOT PROTECTION ZONE (UDO SECTION 8.3.2):
   EQUALS ONE FOOT OF RADIUS FOR EVERY INCH OF DIAMETER OF EXISTING TREES, OR SIX FOOT RADIUS, WHICHEVER IS GREATER. NO DISTURBANCE ALLOWED WITHIN THIS AREA. AREA MUST BE PROTECTED WITH BOTH TREE PROTECTION FENCING AND WARNING SIGNS.
7. PROTECTION OF EXISTING VEGETATION (UDO SECTION 8.3.2D):
   AT THE START OF GRADING INVOLVING THE LOWERING OF EXISTING GRADE AROUND A TREE OR STRIPPING OF TOPSOIL, A CLEAN, SHARP, VERTICAL CUT SHALL BE MADE AT THE EDGE OF THE TREE SAVE AREA PRIOR TO OR AT THE SAME TIME AS SILT FENCE AND OTHER EROSION CONTROL MEASURES ARE INSTALLED. THE TREE PROTECTION FENCING SHALL BE INSTALLED ON THE SIDE OF THE CUT FARTHEST AWAY FROM THE TREE TRUNK AND SHALL REMAIN IN PLACE UNTIL ALL CONSTRUCTION IN THE VICINITY OF THE TREES IS COMPLETE. NO STORAGE OF MATERIALS, FILL, OR EQUIPMENT AND NO TRESPASSING SHALL BE ALLOWED WITHIN THE BOUNDARY OF THE PROTECTED AREA.
8. EROSION CONTROL PLANS APPROVAL BY DURHAM COUNTY ENGINEERING S & E DIVISION.
9. CENTERLINE OF 10 FOOT WIDE CITY OF DURHAM SANITARY SEWER EASEMENT. SUBJECT TO TERMS STATED IN THE DECLARATION IN REAL ESTATE BOOK 1510, PAGE 958. NO STRUCTURES, FILLS, EMBANKMENTS, TREES OR OBSTRUCTIONS PERMITTED WITHIN THE EASEMENT EXCEPT ACCORDING TO THOSE TERMS.
10. A CITY OF DURHAM DRIVEWAY PERMIT IS REQUIRED PRIOR TO ANY DRIVEWAY CONSTRUCTION ON PUBLIC RIGHT-OF-WAY. SUBMIT PLANS FOR DRIVEWAY PERMIT APPROVAL TO CITY ENGINEERING DEVELOPMENT REVIEW. AFTER OBTAINING THE PERMIT, PLEASE CALL CITY OF DURHAM ENGINEERING INSPECTION OFFICE AT 560-4326 PRIOR TO START OF CONSTRUCTION. **NCDOT DRIVEWAY PERMIT REQUIRED PRIOR TO CONSTRUCTION.** CONTACT NCDOT AT 560-6854 FOR REQUIREMENTS.
11. A UTILITY MAINLINE CONSTRUCTION PERMIT IS REQUIRED PRIOR TO THE INSTALLATION OF EACH UTILITY. ALL UTILITIES SHALL SUBMIT PLAN DRAWINGS AND APPLICATIONS TO THE CITY ENGINEERING DIVISION.
12. THE LOCATION OF THE SIDEWALK SHOWN ON THIS PLAN IS SCHEMATIC. A CITY OF DURHAM AND/OR NCDOT ENCROACHMENT PERMIT IS REQUIRED PRIOR TO ANY CONSTRUCTION. AFTER OBTAINING THE REQUIRED PERMITS, PLEASE CONTACT THE CITY OF DURHAM ENGINEERING CONSTRUCTION INSPECTION OFFICE AT 560-4326 FOR A PRE-CONSTRUCTION CONFERENCE AND FIELD VISIT PRIOR TO ANY WORK ON THE PROPOSED SIDEWALK.
13. CAPACITY AND COLLECTION FREQUENCY SHALL PREVENT THE ILLEGAL PLACEMENT OF GARBAGE AND ALL RECYCLABLES.

MAJOR SITE PLAN D110118 SPECIAL CONDITIONS OF APPROVAL

1. AN AS-BUILT CERTIFICATION, PROVIDED BY THE DESIGN ENGINEER, MUST BE SUBMITTED TO AND APPROVED BY THE CITY OF DURHAM PRIOR TO ISSUANCE OF ANY CERTIFICATES OF OCCUPANCY ON THIS SITE.
2. A COMPLETED CITY OF DURHAM DESIGN SUMMARY IS REQUIRED FOR EACH DETENTION/WATER QUALITY DEVICE NO LATER THAN AT FIRST SUBMITTAL OF CONSTRUCTION DRAWINGS.
3. AT A MINIMUM, THE STORM WATER DESIGN DETAILS FOR THIS PROJECT SHALL BE GOVERNED BY THE MINIMUM STANDARDS OF THE NOVEMBER 2006 CITY OF DURHAM REFERENCE GUIDE FOR DEVELOPMENT. NON-COMPLIANCE WITH ANY OF THESE MINIMUM STANDARDS SHALL RENDER THE APPROVAL OF SUCH ITEMS NULL AND VOID. IT WILL BE THE RESPONSIBILITY OF THE OWNER TO CORRECT ANY DEFICIENCIES NOTED DURING THE LIFE OF THIS PROJECT TO THE SATISFACTION OFF THE CITY OF DURHAM.
4. REQUIRED PRIOR TO ISSUANCE OF CERTIFICATE OF COMPLIANCE OR OCCUPANCY. NCDOT DRIVEWAY PERMIT REQUIRED PRIOR TO CONSTRUCTION. CONTACT NCDOT AT 560-6854 FOR REQUIREMENTS.
5. PROOF OF RECORDED PARCEL RECOMBINATION WILL BE PRESENTED UPON APPLICATION FOR THE FIRST BUILDING PERMIT.
6. A COPY OF THE RECORDED FINAL PLAT ESTABLISHING THE PUBLIC SANITARY SEWER EASEMENT WILL BE PRESENTED TO INSPECTIONS AT APPLICATION FOR THE FIRST BUILDING PERMIT.
7. AS-BUILT LIGHTING SURVEY IS REQUIRED PRIOR TO USE OF THE PARKING LOT. THE OWNER IS RESPONSIBLE FOR CONTACTING THE PLANNING DEPARTMENT FOR A FINAL INSPECTION PRIOR TO USE OF THE PARKING LOT.
8. THE LIGHT POLES AND NEW SIGNS TO BE FLOOD PROOFED AND ELEVATED ABOVE BFE.
9. AS-BUILT DRAWINGS OF NEW PARKING LOT, LIGHT SIGNS AND DRIVEWAY TO BE SUBMITTED AND APPROVED PRIOR TO USE OF THE PARKING LOT AND FINAL APPROVAL OF THE FLOODPLAIN DEVELOPMENT PERMIT.
10. PRIOR TO THE ISSUANCE OF ANY CERTIFICATE OF OCCUPANCY, MAKE A PAYMENT-IN-LIEU FEE TO THE CITY OF DURHAM ENGINEERING DIVISION IN THE AMOUNT OF $5,720.00 (88 LF X $65.00 / LF).

MAJOR SITE PLAN D1100118 APPROVAL STAMPS

PRELIMINARY DESIGN - NOT RELEASED FOR CONSTRUCTION

REV	DATE	DESCRIPTION	BY	ISSUE/REF
1	04-05-11	PERMIT ISSUE	RCN	
2	07-27-11	REVISED PER DRB REVIEW #1	JCB	
3	11-28-11	REVISED PER DRB REVIEW #2	JWR	
4	02-15-12	MSUP REVIEW COMMENTS #1	JWR	
5	04-16-12	MSUP REVIEW COMMENTS #2 & DRB REVIEW #3	RCN	
6	06-20-12	REVERT TO ORIGINAL GRADING	RCN	
7	08-22-12	MSUP REVIEW COMMENTS #3	DHG	
8	10-09-12	MSUP REVIEW COMMENTS #5	RCN	
9	10-24-12	FINAL SITE PLAN REVIEW COMMENTS	RCN	
10	12-06-12	REMOVE FEE IN-LIEU SIDEWALK	JWR	

COMMERCIAL SITE DESIGN
(919) 848-6121, FAX: (919) 848-3741
WWW.CSITEDESIGN.COM
8312 CREEDMOOR ROAD
RALEIGH, NORTH CAROLINA 27613

McDonald's®

THESE PLANS AND SPECIFICATIONS ARE THE PROPERTY OF McDONALD'S CORPORATION AND SHALL NOT BE REPRODUCED WITHOUT THEIR WRITTEN PERMISSION.

OFFICE	RALEIGH REGION
ADDRESS	4601 SIX FORKS ROAD - SUITE 200 - RALEIGH, N.C. 27609

PLAN APPROVAL

	SIGNATURE (2 REQUIRED)	DATE
GENERAL MANAGER		
REGIONAL DEV. DIRECTOR		
REGIONAL CONSTRUCTION MNGR.		
REGIONAL REAL ESTATE MNGR.		
CO-SIGN SIGNATURES		
AREA CONSTRUCTION MNGR.		
AREA REAL ESTATE MNGR.		

STATUS	DATE	BY
FINAL	-	-
PLAN CHECKED	-	-
AS-BUILT	-	-

C-1
COVER SHEET

X:\MCD - McDonalds\0700 Sites\0708 - Durham, NC @ Wellons Village 32-0135\CAD\MCD0708-CS.dwg, 12/11/2012 10:49:46 AM, chrisn

CURVE TABLE						
CURVE	LENGTH	RADIUS	TANGENT	CHORD	BEARING	DELTA
C1	59.67'	94.60'	30.87'	58.69'	S55°46'04"E	36°08'34"

FLOOD INFORMATION

SUBJECT PROPERTY IS LOCATED WITHIN A SPECIAL FLOOD HAZARD ZONE. IT IS LOCATED IN ZONE "AO" AS DEFINED BY FEMA F.I.R.M. COMMUNITY PANEL NUMBER 3720083100 J, WITH AN EFFECTIVE DATE OF MAY 2, 2006.

UTILITY NOTE

THE UNDERGROUND UTILITIES SHOWN HEREON ARE A COMPILATION OF FIELD DATA AND INFORMATION PROVIDED BY THE CITY OF DURHAM. ALTHOUGH EVERY EFFORT HAS BEEN MADE TO ACCURATELY LOCATE THE UNDERGROUND UTILITIES, THE SURVEYOR TAKES NO RESPONSIBILITY FOR THE LOCATION OF ANY UTILITIES SHOWN HEREON, EITHER IN SERVICE OR ABANDONED.

LEGEND

- CALCULATED POINT
- EXISTING IRON PIPE
- BORE HOLE
- IRON PIPE SET
- SANITARY SEWER MANHOLE
- SANITARY SEWER CLEANOUT
- WATER VALVE
- WATER METER
- FIRE HYDRANT
- TELEPHONE PEDESTAL
- TELEPHONE MANHOLE
- ELECTRIC BOX
- LIGHT POLE
- POWER POLE
- CURB INLET
- STORM DRAINAGE MANHOLE
- YARD INLET
- STORM DRAIN
- OU — OVERHEAD UTILITIES
- UE — UNDERGROUND ELECTRIC
- UT — UNDERGROUND TELEPHONE
- W — WATER LINE
- SS — SANITARY SEWER LINE
- G — GAS LINE
- X — FENCE LINE

AC = ACRES
ACSM = AMERICAN CONGRESS ON SURVEYING AND MAPPING
ALTA = AMERICAN LAND TITLE ASSOCIATION
B.M. = BOOK OF MAPS
EIP = EXISTING IRON PIPES
ELEV = ELEVATION
FIRM = FLOOD INSURANCE RATE MAP
GPS = GLOBAL POSITIONING SYSTEM
HUD = HOUSING URBAN DEVELOPMENT
HYD = FIRE HYDRANT
INV = INVERT
IPS = IRON PIPE SET
LLC = LIMITED LIABILITY COMPANY
MPH = MILES PER HOUR
MSL = MEAN SEA LEVEL
N/F = NOW OR FORMERLY
NSPS = NATIONAL SOCIETY OF PROFESSIONAL SURVEYORS
NTS = NOT TO SCALE
R.C.P. = REINFORCED CONCRETE PIPE
R/W = RIGHT-OF-WAY
SF = SQUARE FOOT
S.R. = STATE ROAD
TBM = TEMPORARY BENCH MARK
TWSP = TOWNSHIP
TYP = TYPICAL

EXISTING PARKING INFORMATION (ON-SITE)

TOTAL SPACES						
40	27	SPACES	9'	X	20'	@ 60 °
	2	SPACES	8'	X	20'	@ 60 °
	11	SPACES	9'	X	20'	@ 90 °

SURVEY INFORMATION

PREPARED BY: COMMERCIAL SITE DESIGN
8312 CREEDMOOR ROAD
RALEIGH, NC 27613
PH: 919-848-6121 FAX: 919-848-3741
DATE OF SURVEY: 8/1/07 DATE OF MAP: 8/15/07

PLAN SCALE: 1" = 20

STREET ADDRESS
1010 NORTH MIAMI BOULEVARD

CITY	STATE
DURHAM	NORTH CAROLINA

COUNTY
DURHAM

TAX PARCEL NUMBER	LOCATION CODE NUMBER
0831-12-86-7423	32-0135
CSD FILENAME: MCD0708-T	

REV	DATE	DESCRIPTION	BY	ISSUE/REF
1	04-05-11	PERMIT ISSUE	RCN	
2	07-27-11	REVISED PER DRB REVIEW #1	JCB	
3	11-28-11	REVISED PER DRB REVIEW #2	JWR	
4	02-15-12	MSPU REVIEW COMMENTS #1	JWR	
5	04-16-12	MSUP REVIEW COMMENTS #2 & DRB REVIEW #3	RCN	
6	06-20-12	REVERT TO ORIGINAL GRADING	RCN	

COMMERCIAL SITE DESIGN
8312 CREEDMOOR ROAD
RALEIGH, NORTH CAROLINA 27613
(919) 848-6121, FAX: (919) 848-3741
WWW.CSDDESIGN.COM

McDonald's®
THESE PLANS AND SPECIFICATIONS ARE THE PROPERTY OF McDONALD'S CORPORATION AND SHALL NOT BE REPRODUCED WITHOUT THEIR WRITTEN PERMISSION.

OFFICE: RALEIGH REGION
ADDRESS: 4601 SIX FORKS ROAD - SUITE 200 - RALEIGH, N.C. 27609

PLAN APPROVAL

	SIGNATURE (2 REQUIRED)	DATE
REGIONAL MGR.		
REGIONAL DEV. DIRECTOR		
REGIONAL CONSTRUCTION MGR.		
REGIONAL REAL ESTATE MGR.		
CO-SIGN SIGNATURES		
AREA CONSTRUCTION MGR.		
CONTRACTOR		

STATUS	DATE	BY
FINAL	-	-
PLAN CHECKED	-	-
AS-BUILT	-	-

C-2
TOPOGRAPHIC SURVEY

X:\MCD - McDonalds\0700 Sites\0708 - Durham, NC @ Wellons Village 32-0135\CAD\MCD0708-T.dwg, 7/12/2012 6:59:13 AM, chrisn

FLOOD INFORMATION

SUBJECT PROPERTY IS LOCATED WITHIN A SPECIAL FLOOD HAZARD ZONE. IT IS LOCATED IN ZONE "AO" AS DEFINED BY FEMA F.I.R.M. COMMUNITY PANEL NUMBER 3720083100 J, WITH AN EFFECTIVE DATE OF MAY 2, 2006.

CURVE TABLE						
CURVE	LENGTH	RADIUS	TANGENT	CHORD	BEARING	DELTA
C1	59.67'	94.60'	30.87'	58.69'	S55°46'04"E	36°08'34"

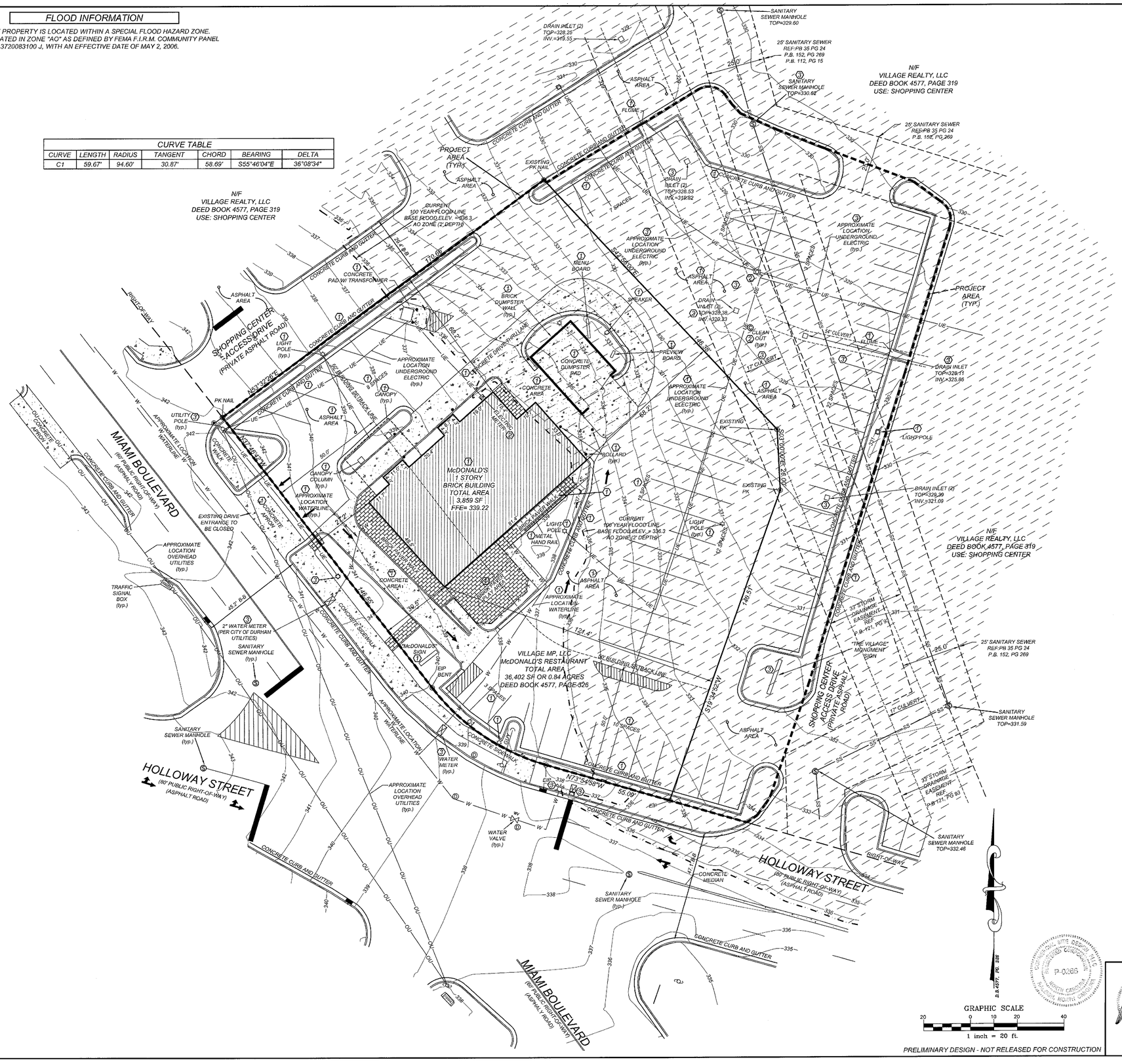

PRELIMINARY DESIGN - NOT RELEASED FOR CONSTRUCTION

DEMOLITION KEYNOTES

1. REMOVE EXISTING ITEM, COORDINATE REMOVAL WITH APPLICABLE FEDERAL, STATE, COUNTY, CITY, LOCAL AGENCIES OR LOCAL UTILITY COMPANY.
2. RELOCATE EXISTING ITEM, COORDINATE RELOCATION WITH APPLICABLE FEDERAL, STATE, COUNTY, CITY, LOCAL AGENCIES OR LOCAL UTILITY COMPANY.
3. ITEM TO REMAIN.

SHADING DENOTES AREA LOCATED WITHIN FLOOD ZONE "AO" +2

LEGEND

- CALCULATED POINT
- EXISTING IRON PIPE
- BORE HOLE
- IRON PIPE SET
- SANITARY SEWER MANHOLE
- SANITARY SEWER CLEANOUT
- WATER VALVE
- WATER METER
- FIRE HYDRANT
- TELEPHONE PEDESTAL
- TELEPHONE MANHOLE
- ELECTRIC BOX
- LIGHT POLE
- POWER POLE
- CURB INLET
- STORM DRAINAGE MANHOLE
- YARD INLET
- STORM DRAIN
- OU — OVERHEAD UTILITIES
- UE — UNDERGROUND ELECTRIC
- UT — UNDERGROUND TELEPHONE
- W — WATER LINE
- SS — SANITARY SEWER LINE
- G — GAS LINE
- X — FENCE LINE

AC = ACRES
ACSM = AMERICAN CONGRESS ON SURVEYING AND MAPPING
ALTA = AMERICAN LAND TITLE ASSOCIATION
B.M. = BOOK OF MAPS
EIP = EXISTING IRON PIPES
ELEV = ELEVATION
FIRM = FLOOD INSURANCE RATE MAP
GPS = GLOBAL POSITIONING SYSTEM
HUD = HOUSING URBAN DEVELOPMENT
HYD = FIRE HYDRANT
INV = INVERT
IPS = IRON PIPE SET
LLC = LIMITED LIABILITY COMPANY
MPH = MILES PER HOUR
MSL = MEAN SEA LEVEL
N/F = NOW OR FORMERLY
NSPS = NATIONAL SOCIETY OF PROFESSIONAL SURVEYORS
NTS = NOT TO SCALE
R.C.P. = REINFORCED CONCRETE PIPE
R/W = RIGHT-OF-WAY
SF = SQUARE FOOT
S.R. = STATE ROAD
TBM = TEMPORARY BENCH MARK
TWSP = TOWNSHIP
TYP = TYPICAL

EXISTING PARKING INFORMATION (ON-SITE)

TOTAL SPACES						
40	27	SPACES	9'	X	20'	@ 60 °
	2	SPACES	8'	X	20'	@ 60 °
	11	SPACES	9'	X	20'	@ 90 °

SURVEY INFORMATION

PREPARED BY: COMMERCIAL SITE DESIGN
8312 CREEDMOOR ROAD
RALEIGH, NC 27613
PH: 919-848-6121 FAX: 919-848-3741
DATE OF SURVEY: 8/1/07 DATE OF MAP: 8/15/07

PLAN SCALE: 1" = 20

STREET ADDRESS
1010 NORTH MIAMI BOULEVARD

CITY	STATE
DURHAM	NORTH CAROLINA

COUNTY
DURHAM

TAX PARCEL NUMBER	LOCATION CODE NUMBER
0831-12-86-7423	32-0135
CSD FILENAME: MCD0708-DP	

REV	DATE	DESCRIPTION	BY	ISSUE/REF
1	04-05-11	PERMIT ISSUE	RCN	
2	07-27-11	REVISED PER DRB REVIEW #1	JCB	
3	11-28-11	REVISED PER DRB REVIEW #2	JWR	
4	02-15-12	MSPU REVIEW COMMENTS #1	JWR	
5	04-16-12	MSUP REVIEW COMMENTS #2 & DRB REVIEW #3	RCN	
6	06-20-12	REVERT TO ORIGINAL GRADING	RCN	

COMMERCIAL SITE DESIGN
(919) 848-6121, FAX: (919) 848-3741
WWW.CSITEDESIGN.COM
8312 CREEDMOOR ROAD
RALEIGH, NORTH CAROLINA 27613

THESE PLANS AND SPECIFICATIONS ARE THE PROPERTY OF McDONALD'S CORPORATION AND SHALL NOT BE REPRODUCED WITHOUT THEIR WRITTEN PERMISSION.

RALEIGH REGION
4501 SIX FORKS ROAD - SUITE 200 - RALEIGH, N.C. 27609

OFFICE
ADDRESS

PLAN APPROVAL

	SIGNATURE (2 REQUIRED)	DATE
REGIONAL MGR.		
REGIONAL DEV. DIRECTOR		
REGIONAL CONSTRUCTION MGR.		
REGIONAL REAL ESTATE MGR.		
CO-SIGN SIGNATURES		
AREA CONSTRUCTION MGR.		
CONTRACTOR		

STATUS	DATE	BY
FINAL	-	-
PLAN CHECKED	-	-
AS-BUILT	-	-

C-2a
DEMOLITION PLAN

X:\MCD - McDonalds\0700 Sites\0708 - Durham, NC @ Wallace Village 32-0135\CAD\MCD0708-DP.dwg, 7/12/2012 7:00:22 AM, chrisn

SITE KEY NOTES:

1. CONSTRUCT 2' SPILLING CURB AND GUTTER PER DETAIL SHEET
2. CONSTRUCT 2' CATCHING CURB AND GUTTER PER DETAIL SHEET
3. ASPHALT PAVEMENT PER SOILS REPORT SPECIFICATIONS
4. TRANSITION FROM ASPHALT TO CONCRETE PAVEMENT PER DETAIL SHEET
5. MATCH EXISTING ASPHALT
6. CONSTRUCT STANDARD CONCRETE H.C. RAMP PER DETAIL SHEET
7. CONSTRUCT FLUSH CONCRETE H.C. RAMP PER DETAIL SHEET
8. DELIVERY RAMP
9. INSTALL HANDICAP SIGNAGE PER ADA ACCESSIBILITY PLAN AND DETAIL SHEET
9a. INSTALL VAN ACCESSIBLE HANDICAP SIGNAGE PER ADA ACCESSIBILITY PLAN AND DETAIL SHEET
10. PAINT HANDICAP SYMBOL
11. PAINT TRAFFIC ARROWS PER DETAIL SHEET
12. PAINT 4" WIDE STRIPE, WHITE
13. PAINT 4" WIDE STRIPES, WHITE @ 45° 2'-0" O.C.
14. GRILL STALL / PICKUP AREA, PAINT FOUR 4" WIDE STRIPE, WHITE
15. PAINTED "DRIVE-THRU" DIRECTIONAL ARROW, YELLOW, COORDINATE WITH McDONALD'S CONSTRUCTION MANAGER
15a. PAINTED DIRECTIONAL ARROW AT DRIVE THRU LANE AND MERGE POINT, YELLOW THERMOPLASTIC, COORDINATE WITH McDONALDS CONSTRUCTION MANAGER
16. PAINT 6" WIDE YELLOW STRIPE ON ASPHALT FROM EDGE OF CONCRETE DRIVE-THRU LANE
17. PAINT "THANK YOU" PER DETAIL SHEET
18. CONSTRUCT CONCRETE WALK WITH TILE SURFACE PER McDONALD'S SPECIFICATIONS
19. CONSTRUCT BROOM FINISH ACCESS CONCRETE SIDEWALK PER DETAIL SHEET
20. CONCRETE PAD @ DRIVE-THRU AND HANDICAP SPACES PER McDONALD'S STANDARDS AND SPECIFICATIONS, 10' CONTROL JOINTS, 30' EXPANSION JOINTS OR PER SOILS REPORT SPECIFICATIONS. GENERAL CONTRACTOR TO VERIFY WITH McDONALD'S AREA CONSTRUCTION MANAGER PRIOR TO APPLYING BLACK COLORING (OPTIONAL).
21. CONCRETE PAD FOR GREASE TRAP, SEE PLUMBING PLANS AND McDONALD'S STANDARDS AND SPECIFICATIONS. GENERAL CONTRACTOR TO VERIFY WITH McDONALD'S AREA CONSTRUCTION MANAGER PRIOR TO APPLYING BLACK COLORING (OPTIONAL).
22. CONSTRUCT CONCRETE DUMPSTER PAD PER SOILS REPORT AND McDONALD'S STANDARDS AND SPECIFICATIONS. GENERAL CONTRACTOR TO VERIFY WITH McDONALD'S AREA CONSTRUCTION MANAGER PRIOR TO APPLYING BLACK COLORING (OPTIONAL). INSTALL SIGN ON GATES TO READ "ATTENTION CONTAINERS ARE ANCHORED TO GROUND DISCONNECT PRIOR TO LOADING AND RE-CONNECT UPON COMPLETION OF SERVICE."
23. CONCRETE WHEEL STOP PER DETAIL SHEET
24. CONCRETE TRANSFORMER PAD (COORDINATE SIZE AND LOCATION WITH POWER COMPANY)
25. CONSTRUCT DUMPSTER ENCLOSURE (TO MATCH BUILDING) PER DETAIL SHEET
26. STORAGE SHED (PER DETAIL SHEET), EXTERIOR FINISH TO MATCH DUMPSTER ENCLOSURE
27. INSTALL NEW SITE IDENTIFICATION SIGN (CONTRACTOR SHALL COORDINATE WITH SIGN COMPANY AND CONSTRUCTION MANAGER).
28. "PLEASE HAVE MONEY ..." SIGN SUPPLIED BY AND INSTALLED BY SIGN CONTRACTOR
29. DIRECTIONAL SIGNAGE (PER DETAIL SHEET): GALVANIZED ANCHOR BOLTS, (6" ABOVE GRADE), FOOTINGS AND ELECTRICITY BY GENERAL CONTRACTOR, SIGN INSTALLED BY SIGN CONTRACTOR. CONTRACTOR TO COORDINATE WITH MCDONALD'S CONSTRUCTION MANAGER
30. INSTALL "ANY LANE ANYTIME" SIGN, CONTRACTOR SHALL COORDINATE WITH McDONALD'S CONSTRUCTION MANAGER
31. POLE MOUNTED AREA LIGHT(S) SEE LIGHTING PLAN: GALVANIZED ANCHOR BOLTS, (6" ABOVE GRADE), FOOTINGS BY GENERAL CONTRACTOR, POLE INSTALLED BY SIGN CONTRACTOR. CONTRACTOR TO COORDINATE WITH MCDONALD'S CONSTRUCTION MANAGER

SITE KEY NOTES (cont.):

32. MENU BOARD (PER DETAIL SHEET): GALVANIZED ANCHOR BOLTS, (6" ABOVE GRADE), FOOTINGS AND ELECTRICITY BY GENERAL CONTRACTOR, SIGN INSTALLED BY SIGN CONTRACTOR. CONTRACTOR TO COORDINATE WITH MCDONALD'S CONSTRUCTION MANAGER
33. VERTICAL PREVIEW "PRE-SELL" BOARD (PER DETAIL SHEET): GALVANIZED ANCHOR BOLTS, (6" ABOVE GRADE), FOOTINGS AND ELECTRICITY BY GENERAL CONTRACTOR, SIGN INSTALLED BY SIGN CONTRACTOR. CONTRACTOR TO COORDINATE WITH MCDONALD'S CONSTRUCTION MANAGER
34. CUSTOMER ORDER DISPLAY WITH DETECTOR LOOP (PER DETAIL SHEET): GALVANIZED ANCHOR BOLTS, (6" ABOVE GRADE), FOOTINGS AND ELECTRICITY BY GENERAL CONTRACTOR, SIGN INSTALLED BY SIGN CONTRACTOR. CONTRACTOR TO COORDINATE WITH MCDONALD'S CONSTRUCTION MANAGER
35. DRIVE-THRU CANOPY (PER DETAIL SHEET): GALVANIZED ANCHOR BOLTS, (6" ABOVE GRADE), FOOTINGS AND ELECTRICITY BY GENERAL CONTRACTOR, SIGN INSTALLED BY SIGN CONTRACTOR. CONTRACTOR TO COORDINATE WITH MCDONALD'S CONSTRUCTION MANAGER
36. 30'-0" FLAG POLE, ALUMINUM FINISH POLE AND FLAG (PER DETAIL SHEET), GALVANIZED ANCHOR BOLTS, (6" ABOVE GRADE), FOOTINGS BY GENERAL CONTRACTOR, POLE INSTALLED BY SIGN CONTRACTOR. CONTRACTOR TO COORDINATE WITH MCDONALD'S CONSTRUCTION MANAGER
37. STEEL PIPE BOLLARD PER DETAIL SHEET
38. HANDRAIL, SEE ARCHITECTURAL PLANS
39. 6" VERTICAL HEADER CURB PER DETAIL SHEET
40. MATCH EXISTING CURB AND GUTTER
41. PAINT CROSSWALK PER DETAIL SHEET
42. VALLEY GUTTER PER DETAIL SHEET
43. EXISTING FIRE HYDRANT
44. INSTALL 2-URACKS FOR REQUIRED BICYCLE PARKING PER DETAIL SHEET
45. TRUNCATED DOMES PER DETAIL SHEET

SITE KEY NOTES (cont.):

46. CONSTRUCT CONCRETE SIDEWALK PER CITY OF DURHAM AND NCDOT STANDARDS AND SPECIFICATIONS
47. CONSTRUCT CONCRETE H.C. RAMP PER CITY OF DURHAM AND NCDOT STANDARDS AND SPECIFICATIONS
48. MATCH EXISTING CONCRETE SIDEWALK
49. RETAINING WALL WITH PEDESTRIAN GUARD RAIL, DESIGN BY OTHERS, SEE SHEET C-14 FOR DETAILS
50. INSTALL CONRETE STEPS WITH HANDRAILS, SEE SHEET C-13
51. INSTALL CONCRETE HANDICAP ACCESSIBLE RAMP WITH HANDRAILS, SEE SHEET C-13
52. RETAINING WALL, DESIGN BY OTHERS
53. TURNDOWN CURB PER DETAIL SHEET

GENERAL SITE NOTES:

1. THE CONTRACTOR SHALL VERIFY LOCATION AND ELEVATION OF ALL UNDERGROUND UTILITIES. THE LOCATION OF ALL EXISTING UTILITIES ARE NOT NECESSARILY SHOWN ON THE PLANS AND WHERE SHOWN ARE ONLY APPROXIMATE. THE CONTRACTOR SHALL ON HIS INITIATIVE AND AT NO EXTRA COSTS HAVE LOCATED ALL UNDERGROUND LINES AND STRUCTURES AS NECESSARY. NO CLAIMS FOR DAMAGES OR EXTRA COMPENSATION SHALL ACCRUE TO THE CONTRACTOR FROM THE PRESENCE OF SUCH PIPE, OTHER OBSTRUCTIONS OR FROM ANY DELAY DUE TO REMOVAL OR REARRANGEMENT OF THE SAME. THE CONTRACTOR SHALL BE RESPONSIBLE FOR ANY DAMAGE TO UNDERGROUND STRUCTURES. THE CONTRACTOR IS RESPONSIBLE FOR CONTACTING ALL NON-SUBSCRIBING UTILITIES. THE CONTRACTOR(S) SHALL CONTACT NORTH CAROLINA "ONE CALL" AT 800-632-4949 FOR ASSISTANCE IN LOCATING EXISTING UTILITIES. CALL AT LEAST 48 HOURS PRIOR TO ANY DIGGING.
2. THE LOCATIONS OF ALL UTILITIES SHOWN ON THESE PLANS ARE BASED ON THE AVAILABLE INFORMATION. THE CONTRACTOR SHALL VERIFY THE EXACT LOCATION OF UTILITIES WITH THE UTILITY OWNERS PRIOR TO COMMENCEMENT OF CONSTRUCTION.
3. PRIOR TO STARTING CONSTRUCTION, THE GENERAL CONTRACTOR SHALL BE RESPONSIBLE TO VERIFY THAT ALL REQUIRED PERMITS AND APPROVALS HAVE BEEN OBTAINED. NO CONSTRUCTION OR FABRICATION OF ANY ITEM SHALL BEGIN UNTIL THE CONTRACTOR HAS RECEIVED ALL PLANS AND ANY OTHER DOCUMENTATION FROM ALL OF THE PERMITTING AND ANY OTHER REGULATORY AUTHORITIES. FAILURE OF THE CONTRACTOR TO FOLLOW THIS PROCEDURE SHALL CAUSE THE CONTRACTOR TO ASSUME FULL RESPONSIBILITY FOR ANY SUBSEQUENT MODIFICATION OF THE WORK MANDATED BY ANY ANY REGULATORY AUTHORITY. ALL CONSTRUCTION TO BE IN ACCORDANCE WITH PERMITS ISSUED AND APPLICABLE STATE, COUNTY AND LOCAL CODES.
4. THE GENERAL CONTRACTOR SHALL CONTACT ALL OWNERS OF EASEMENTS, UTILITIES AND RIGHT-OF-WAYS, PUBLIC OR PRIVATE, PRIOR TO WORKING IN THESE AREAS. ACCESS SHALL BE LIMITED UNTIL PERMISSION IS GRANTED.
5. CONTRACTOR SHALL MAINTAIN THE SITE IN A MANNER SO THAT WORKMEN AND PUBLIC SHALL BE PROTECTED FROM INJURY, AND ADJOINING PROPERTY PROTECTED FROM DAMAGE.
6. CONTRACTOR IS RESPONSIBLE FOR DAMAGE TO ANY EXISTING ITEM AND/OR MATERIAL INSIDE OR OUTSIDE CONTRACT LIMITS DUE TO CONSTRUCTION OPERATIONS.
7. ALL SITE DIMENSIONS ARE TO THE FACE OF CURB, UNLESS OTHERWISE NOTED.
8. THE GENERAL CONTRACTOR SHALL KEEP THE AREA OUTSIDE THE "CONSTRUCTION LIMITS" BROOM CLEAN AT ALL TIMES AND REMOVE ALL TRASH AND DEBRIS FROM THE SITE UPON COMPLETION OF THE PROJECT AND AT LEAST ONCE A WEEK DURING CONSTRUCTION.
9. BEFORE COMMENCEMENT OF WORK, THE CONTRACTOR SHALL REVIEW ALL PLANS AND SPECIFICATIONS AND THE JOB SITE. THE CONTRACTOR SHALL NOTIFY THE OWNER AND THE ENGINEER WHO PREPARED THE PLANS OF ANY DISCREPANCIES THAT MAY REQUIRE MODIFICATIONS TO THESE PLANS OR OF ANY FIELD CONFLICTS.
10. ALL PERMITS RELATIVE TO THE PROJECT MUST BE OBTAINED, PRIOR TO CONSTRUCTION. ALL CONSTRUCTION TO BE IN ACCORDANCE WITH PERMITS ISSUED AND APPLICABLE STATE, COUNTY AND LOCAL CODES.
11. ALL WORK IN RIGHT-OF-WAY SHALL BE PERFORMED IN ACCORDANCE WITH "THE CURRENT EDITION OF THE STATE DEPARTMENT OF TRANSPORTATION CONSTRUCTION AND MATERIALS SPECIFICATIONS".
12. CONTRACTOR AGREES THAT IN ACCORDANCE WITH GENERALLY ACCEPTED CONSTRUCTION PRACTICES, CONTRACTOR WILL BE REQUIRED TO ASSUME SOLE AND COMPLETE RESPONSIBILITY FOR JOB SITE CONDITIONS DURING THE COURSE OF CONSTRUCTION OF THE PROJECT, INCLUDING SAFETY OF ALL PERSONS AND PROPERTY. THIS REQUIREMENT SHALL BE MADE TO APPLY CONTINUOUSLY AND NOT BE LIMITED TO NORMAL WORKING HOURS. CONTRACTOR FURTHER AGREES TO DEFEND, INDEMNIFY, AND HOLD THE OWNER AND DESIGN PROFESSIONAL HARMLESS OF ANY AND ALL LIABILITY, REAL OR ALLEGED IN CONNECTION WITH THE PERFORMANCE OF WORK ON THIS PROJECT, ACCEPTING LIABILITY ARISING FROM THE SOLE NEGLIGENCE OF THE OWNER OR DESIGN PROFESSIONAL.
13. SUBJECT PROPERTY IS LOCATED WITHIN A SPECIAL FLOOD HAZARD ZONE. IT IS LOCATED IN ZONE "AO" AS DEFINED BY HUD F.I.R.M. COMMUNITY PANEL NUMBER 3720083100J, WITH AN EFFECTIVE DATE OF MAY 2,2006.

DURHAM SITE DATA

NAME OF DEVELOPMENT:	McDONALD'S @ WELLONS VILLAGE
SITE ADDRESS:	1010 NORTH MIAMI BOULEVARD
PIN NUMBER/TAX MAP NUMBER:	0831-12-86-7423 & 0831-12-96-2562
OWNER / DEVELOPER/APPLICANT:	McDONALD'S USA, LLC 4601 SIX FORKS ROAD SUITE 200 RALEIGH, N.C. 27609 TELEPHONE: (919) 876-9716 FAX: (919) 326-4215
DESIGNER:	COMMERCIAL SITE DESIGN, PLLC 8312 CREEDMOOR ROAD RALEIGH, NORTH CAROLINA 27613 CONTACT: BRIAN SOLTZ PH.: (919) 848-6121, FAX: (919) 848-3741 SOLTZ@CSITEDESIGN.COM
ZONING & WATERSHED:	CC (COMMERCIAL CENTER) F/J-B WATERSHED
DEVELOPMENT TIER:	URBAN TIER
RIVER BASIN:	NEUSE
EXISTING USE:	FAST FOOD RESTAURANT W/DRIVE-THRU
PROPOSED USE:	FAST FOOD RESTAURANT W/ DRIVE-THRU
BUILDING SETBACKS: RIGHT-OF-WAY ..... SIDE ..... REAR:	 50 FEET NONE NONE
PARKING REQUIREMENTS:	1 SPACE PER 100 SF OF GFA 4,600 SF / 100 = 45 SPACES 45 SPACES REQUIRED (McDONALDS)
PARKING PROVIDED:	SEE OVERALL SHOPPING CENTER PLAN (SHEET C-3a) FOR TOTAL PARKING PROVIDED
BICYCLE PARKING:	1 SPACE PER 2,000 SF 4,500 / 2,000 = 3 SPACES 2-U RACKS PROVIDED = 4 SPACES
McDONALD'S SITE AREA: PROJECT AREA: DISTURBED AREA: EXISTING IMPERVIOUS AREA: PROPOSED IMPERVIOUS AREA:	36,402 SF OR 0.84 ACRES 57,905 SF OR 1.33 ACRES 59,464 SF OR 1.37 ACRES 51,179 SF OR 1.17 ACRES 42,088 SF OR 0.97 ACRES
PROPOSED PAVEMENT AREA:	16,651 SF
EXISTING BUILDING AREA:	3,859 SF
PROPOSED BUILDING AREA:	4,500 SF
FLOOR AREA RATIO:	4,500 SF / 36,402 SF = 0.123
WATER & SEWER:	CITY OF DURHAM
TREE COVERAGE REQUIRED:	NOT REQUIRED
TREE COVERAGE PROVIDED:	NOT REQUIRED
BUILDING HEIGHT:	20 FEET
MAX. BUILDING HEIGHT:	50 FEET

NOTES:

1. NOTE THAT AT THE TIME OF CONSTRUCTION DRAWINGS (CD'S) IT SHALL BE SHOWN THAT THE PROPOSED BMP(S) CAN BE SUSTAINED ON SITE. THIS INCLUDES BUT NOT LIMITED TO THE DETERMINATION OF SEASONALLY HIGH WATER TABLE (SHWT) ON THE BMP FOOTPRINT DURING THE APPROPRIATE TIME OF THE YEAR, AS REQUIRED FOR THE PROPOSED BMP (S). HOWEVER, PLEASE NOTE THAT THE SUITABILITY AND SUSTAINABILITY OF PROPOSED BMP SHOULD BE A CRITICAL DESIGN FACTOR IN BMP CHOICE AT THE SITE PLANNING STAGE.
2. IF IT IS DETERMINED AT THE CD STAGE THAT THE PROPOSED BMP(S) IS UNSUSTAINABLE ON SITE OR OTHERWISE FOUND UNSUITABLE FOR THE SITE, ALTERNATE BMP'S SHALL BE REQUIRED ON SITE TO MEET THE SITE REQUIREMENTS. IF ALTERNATE BMP'S ARE REQUIRED, AS DETERMINED AT THE CD STAGE, A REVISED OR AMENDED SITE PLAN MAY BE REQUIRED TO MEET THE STORMWATER PERFORMANCE STANDARDS EXISTING AT THAT TIME.
3. NOTE THAT THE APPROVAL OF BMP'S DOES NOT OCCUR UNTIL THE CONSTRUCTION DRAWING STAGE.
4. AN AS-BUILT CERTIFICATION SHALL BE PROVIDED BY THE DESIGN ENGINEER FOR THE CONSTRUCTION OF THE STORMWATER BMP(S) REQUIRED FOR THIS SITE AND SHALL BE APPROVED BY THE CITY OF DURHAM PRIOR TO THE ISSUANCE OF A CERTIFICATE OF OCCUPANCY."
5. "FOR EACH STORMWATER BMP FACILITY, A COMPLETED CITY OF DURHAM DESIGN SUMMARY SHALL BE PROVIDED NO LATER THAN AT THE FIRST CONSTRUCTION DRAWING SUBMITTAL.
6. THE STORMWATER DESIGN DETAILS FOR THIS PROJECT SHALL, AT A MINIMUM, BE GOVERNED BY THE STANDARDS OF THE NOVEMBER 2006 CITY OF DURHAM REFERENCE GUIDE FOR DEVELOPMENT. NON-COMPLIANCE WITH ANY OF THESE MINIMUM STANDARDS SHALL RENDER THE APPROVAL OF SUCH ITEMS NULL AND VOID. IT WILL BE THE RESPONSIBILITY OF THE OWNER TO CORRECT ANY DEFICIENCIES NOTED DURING THE LIFE OF THIS PROJECT TO THE SATISFACTION OF THE CITY OF DURHAM."
7. "AN EXECUTED STORM WATER FACILITY OPERATION AND MAINTENANCE PERMIT AGREEMENT (PREPARED BY STORMWATER SERVICES, CITY OF DURHAM), PAYMENT OF STORM WATER FACILITY PERMIT FEE ($3, 500 PER DETENTION / WATER QUALITY DEVICE) AND PERPETUAL SURETY FOR THE CONTINUED MAINTENANCE OF THE FACILITY.
8. IN COMPLIANCE WITH DURHAM CITY CODE CHAPTER 70, ARTICLE X. STORMWATER PERFORMANCE STANDARDS FOR DEVELOPMENT, SECTION 70-737 (c) NITROGEN AND PHOSPHORUS CONTROL REQUIREMENT, THE DEVELOPMENT OF THIS SITE IS MAKING USE OF A NUTRIENT BANK. THE APPROVAL OF THIS SITE PLAN IS CONTINGENT UPON THE PURCHASE OF NUTRIENT CREDITS FROM AN APPROVED NUTRIENT BANK. IF A REVISED SITE PLAN IS SUBMITTED FOR THIS SITE, THE REVISED SITE PLAN WILL BE SUBJECT TO ANY ORDINANCES IN PLACE AT THE TIME OF SUBMISSION. PRIOR TO THE APPROVAL OF THIS SITE PLAN PERTAINING TO THIS SITE, A LETTER SHOWING THE PURCHASE OF THE NUTRIENT CREDITS FOR THIS SITE AND A COPY OF THE NUTRIENT BANK LETTER IS TO BE PROVIDED SHOWING THE TOTAL NUTRIENT CREDITS AVAILABLE MINUS ANY AND ALL DEDUCTIONS IS TO BE PROVIDED TO THE CITY OF DURHAM STORMWATER SERVICES.

FLOOD INFORMATION

SUBJECT PROPERTY IS LOCATED WITHIN A SPECIAL FLOOD HAZARD ZONE. IT IS LOCATED IN ZONE "AO" AS DEFINED BY FEMA F.I.R.M. COMMUNITY PANEL NUMBER 3720083100 J, WITH AN EFFECTIVE DATE OF MAY 2, 2006.

GRAPHIC SCALE

20 0 10 20 40

1 inch = 20 ft.

PRELIMINARY DESIGN - NOT RELEASED FOR CONSTRUCTION

LEGEND

- SPILL CURB
- HANDICAP RAMP
- HANDICAP STALL
- CONCRETE
- PROPERTY LINE
- SIGN
- BOLLARD
- EX. FIRE HYDRANT
- FENCE
- POLE MOUNTED AREA LIGHT
- PROPERTY CORNER
- F.F.E. = XXX.XX FINISH FLOOR ELEVATION

PAVING SPECIFICATIONS (ON-SITE)

CONTRACTOR TO REFER TO SOILS REPORT PREPARED BY ECS, PROJECT NO. 06:15148 DATED JUNE 29, 2007.
3 INCHES ASPHALT SURFACE (SF9.5A)
9 INCHES AGGREGATE BASE
NOTE:
McDONALD'S ENGINEER RESERVES THE RIGHT TO REQUEST A COMPACTION TEST AND/OR A CORE SAMPLE. IF TESTS PROVE CORRECT, PER ABOVE SPECIFICATION, TESTS WILL BE AT THE EXPENSE OF McDONALD'S, OTHERWISE, GENERAL CONTRACTOR WILL BE CHARGED.

PARKING INFORMATION (ON-SITE)

TOTAL SPACES 30	28	SPACES	9'	X	20'	@ 60 °
	2	SPACES	8'	X	20'	@ 60 °

UTILITY INFORMATION

	SIZE	TYPE	LOCATION
SANITARY SEWER	12"	PUBLIC	REAR OF SITE
WATER	6" & 12"	PUBLIC	ALONG STREETS
STORM SEWER	6'	BOX CULVERT	REAR OF SITE
ELECTRIC		OVERHEAD	ALONG STREETS
GAS		PUBLIC	OTHER SIDE OF HOLLOWAY ST.

SURVEY INFORMATION

PREPARED BY: COMMERCIAL SITE DESIGN
8312 CREEDMOOR ROAD
RALEIGH, NC 27613
PH: 919-848-6121 FAX: 919-848-3741
DATE OF SURVEY: 8/1/07 DATE OF MAP: 8/15/07

PLAN SCALE: 1" = 20

STREET ADDRESS
1010 NORTH MIAMI BOULEVARD

CITY	STATE
DURHAM	NORTH CAROLINA
COUNTY: DURHAM	
TAX PARCEL NUMBER: 0831-12-86-7423	LOCATION CODE NUMBER: 32-0135
CSD FILENAME: MCD0708-SP	

REV	DATE	DESCRIPTION	BY	ISSUE/REF
1	04-05-11	PERMIT ISSUE	RCN	
2	07-27-11	REVISED PER DRB REVIEW #1	JCB	
3	11-28-11	REVISED PER DRB REVIEW #2	JWR	
4	02-15-12	MSPU REVIEW COMMENTS #1	JWR	
5	04-16-12	MSUP REVIEW COMMENTS #2 & DRB REVIEW #3	RCN	
6	06-20-12	REVERT TO ORIGINAL GRADING	RCN	
7	08-22-12	MSUP REVIEW COMMENTS #3	DHG	
8	10-09-12	MSUP REVIEW COMMENTS #5	RCN	
9	10-24-12	FINAL SITE PLAN REVIEW COMMENTS	RCN	
10	12-06-12	REMOVE FEE IN-LIEU SIDEWALK	JWR	

COMMERCIAL SITE DESIGN
8312 CREEDMOOR ROAD
RALEIGH, NORTH CAROLINA 27613
(919) 848-6121, FAX: (919) 848-3741
WWW.CSITEDESIGN.COM

McDonald's
THESE PLANS AND SPECIFICATIONS ARE THE PROPERTY OF McDONALDS CORPORATION AND SHALL NOT BE REPRODUCED WITHOUT THEIR WRITTEN PERMISSION.

RALEIGH REGION
OFFICE
4601 SIX FORKS ROAD - SUITE 200 - RALEIGH, N.C. 27609
ADDRESS

PLAN APPROVAL

SIGNATURE (2 REQUIRED)	DATE
REGIONAL MGR.	
REGIONAL DEV. DIRECTOR	
REGIONAL CONSTRUCTION MGR.	
REGIONAL REAL ESTATE MGR.	
CO-SIGN SIGNATURES	
AREA CONSTRUCTION MGR.	
CONTRACTOR	

STATUS	DATE	BY
FINAL	-	-
PLAN CHECKED	-	-
AS-BUILT	-	-

C-3
SITE PLAN

X:\MCD - McDonalds\0700 Sites\0708 - Durham, NC @ Wellons Village 32-0135\CAD\MCD0708-SP.dwg, 12/6/2012 3:52:36 PM, jarner

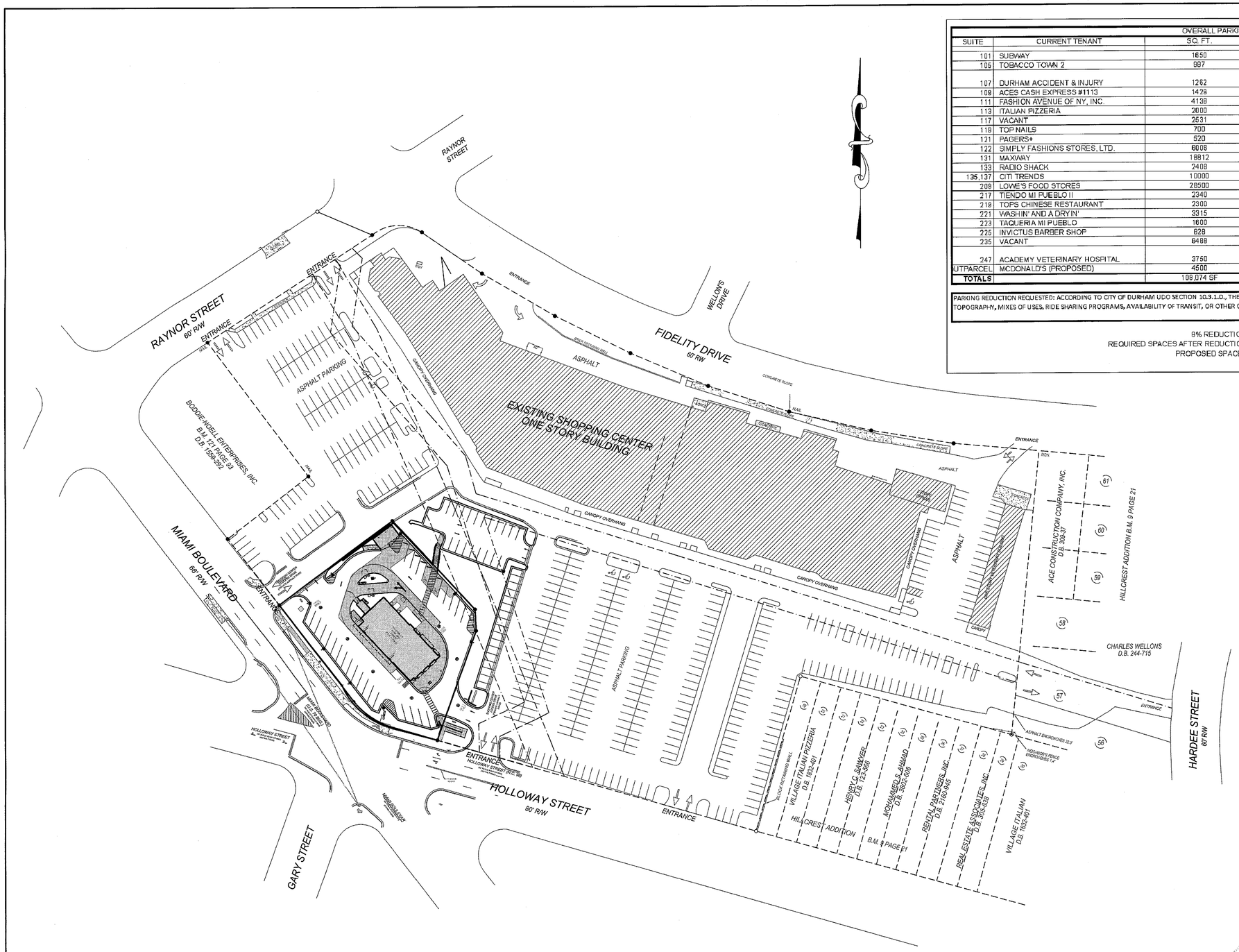

OVERALL PARKING CALCULATIONS				
SUITE	CURRENT TENANT	SQ. FT.	PARKING CRITERIA	REQUIRED SPACES
101	SUBWAY	1650	1 SPACE / 100 SF	17
105	TOBACCO TOWN 2	987	1 SPACE / 200 SF	5
107	DURHAM ACCIDENT & INJURY	1262	4 SPACES PER DOCTOR, 1 SPACE PER EMPLOYEE	9
109	ACES CASH EXPRESS #1113	1429	1 SPACE / 200 SF	8
111	FASHION AVENUE OF NY, INC.	4198	1 SPACE / 200 SF	21
113	ITALIAN PIZZERIA	2000	1 SPACE / 100 SF	20
117	VACANT	2631	1 SPACE / 200 SF	13
119	TOP NAILS	700	1 SPACE / 200 SF	4
121	PAGERS+	520	1 SPACE / 200 SF	3
122	SIMPLY FASHIONS STORES, LTD.	6006	1 SPACE / 200 SF	30
131	MAXWAY	18812	1 SPACE / 900 SF	21
133	RADIO SHACK	2408	1 SPACE / 200 SF	12
135,137	CITI TRENDS	10000	1 SPACE / 200 SF	50
209	LOWE'S FOOD STORES	28500	1 SPACE / 200 SF	143
217	TIENDO MI PUEBLO II	2340	1 SPACE / 200 SF	12
219	TOPS CHINESE RESTAURANT	2300	1 SPACE / 100 SF	23
221	WASHIN' AND A DRYIN'	3315	1 SPACE / 200 SF	17
223	TAQUERIA MI PUEBLO	1600	1 SPACE / 100 SF	16
225	INVICTUS BARBER SHOP	628	1 SPACE / 200 SF	5
235	VACANT	8488	1 SPACE / 200 SF	43
247	ACADEMY VETERINARY HOSPITAL	3750	4 SPACES PER DOCTOR, 1 PER EMPLOYEE	15
OUTPARCEL	MCDONALD'S (PROPOSED)	4500	1 SPACE / 100 SF	45
TOTALS		109,074 SF		521 SPACES

PARKING REDUCTION REQUESTED: ACCORDING TO CITY OF DURHAM UDO SECTION 10.3.1.D., THE DRB MAY REDUCE THE REQUIRED NUMBER OF SPACES BY UP TO 20 PERCENT FOR REASONS OF TOPOGRAPHY, MIXES OF USES, RIDE SHARING PROGRAMS, AVAILABILITY OF TRANSIT, OR OTHER CONDITIONS SPECIFIC TO THE SITE.

9% REDUCTION:	46 SPACES
REQUIRED SPACES AFTER REDUCTION:	475 SPACES
PROPOSED SPACES:	478 SPACES

GRAPHIC SCALE
60 0 30 60 120
1 inch = 60 ft.

PRELIMINARY DESIGN - NOT RELEASED FOR CONSTRUCTION

P-0286

12/7/12

REV	DATE	DESCRIPTION	BY	ISSUE/REF
1	04-05-11	PERMIT ISSUE	RCN	
2	07-27-11	REVISED PER DRB REVIEW #1	JCB	
3	11-28-11	REVISED PER DRB REVIEW #2	JWR	
4	02-15-12	MSPU REVIEW COMMENTS #1	JWR	
5	04-16-12	MSUP REVIEW COMMENTS #2 & DRB REVIEW #3	RCN	
6	06-20-12	REVERT TO ORIGINAL GRADING	RCN	
7	08-22-12	MSUP REVIEW COMMENTS #3	DHG	
8	10-09-12	MSUP REVIEW COMMENTS #5	RCN	
9	10-24-12	FINAL SITE PLAN REVIEW COMMENTS	RCN	
10	12-06-12	REMOVE FEE IN-LIEU SIDEWALK	JWR	

COMMERCIAL SITE DESIGN
8312 CREEDMOOR ROAD
RALEIGH, NORTH CAROLINA 27615
(919) 848-0201, FAX: (919) 848-0241
WWW.CMSITEDESIGN.COM

McDonald's

THESE PLANS AND SPECIFICATIONS ARE THE PROPERTY OF MCDONALD'S CORPORATION AND SHALL NOT BE REPRODUCED WITHOUT THEIR WRITTEN PERMISSION.

RALEIGH REGION

OFFICE	4601 SIX FORKS ROAD - SUITE 200 - RALEIGH, N.C. 27609
ADDRESS	

PLAN APPROVAL

SIGNATURE (2 REQUIRED)	DATE
REGIONAL MGR.	
REGIONAL DEV. DIRECTOR	
REGIONAL CONSTRUCTION MGR.	
REGIONAL REAL ESTATE MGR.	

CO-SIGN SIGNATURES

AREA CONSTRUCTION MGR.	
CONTRACTOR	

PLAN SCALE: 1" = 60'

STREET ADDRESS
1010 NORTH MIAMI BOULEVARD

CITY	STATE
DURHAM	NORTH CAROLINA

COUNTY
DURHAM

TAX PARCEL NUMBER	LOCATION CODE NUMBER
0831-12-86-7423	32-0135
CSD FILENAME: MCD0708-OSP	

STATUS	DATE	BY
FINAL	-	-
PLAN CHECKED	-	-
AS-BUILT	-	-

C-3a
OVERALL SITE PLAN

C:\MCD - McDonalds\0700 Sites\0708 - Durham, NC @ Wellons Village 32-0135\CAD\MCD0708-OSP.dwg, 12/6/2012 3:53:46 PM, janer

GENERAL SITE NOTES:

1. THE CONTRACTOR SHALL VERIFY LOCATION AND ELEVATION OF ALL UNDERGROUND UTILITIES. THE LOCATION OF ALL EXISTING UTILITIES ARE NOT NECESSARILY SHOWN ON THE PLANS AND WHERE SHOWN ARE ONLY APPROXIMATE. THE CONTRACTOR SHALL ON HIS INITIATIVE AND AT NO EXTRA COSTS HAVE LOCATED ALL UNDERGROUND LINES AND STRUCTURES AS NECESSARY. NO CLAIMS FOR DAMAGES OR EXTRA COMPENSATION SHALL ACCRUE TO THE CONTRACTOR FROM THE PRESENCE OF SUCH PIPE, OTHER OBSTRUCTIONS OR FROM ANY DELAY DUE TO REMOVAL OR REARRANGEMENT OF THE SAME. THE CONTRACTOR SHALL BE RESPONSIBLE FOR ANY DAMAGE TO UNDERGROUND STRUCTURES. THE CONTRACTOR IS RESPONSIBLE FOR CONTACTING ALL NON-SUBSCRIBING UTILITIES. THE CONTRACTOR(S) SHALL CONTACT NORTH CAROLINA "ONE CALL" AT 800-632-4949 FOR ASSISTANCE IN LOCATING EXISTING UTILITIES. CALL AT LEAST 48 HOURS PRIOR TO ANY DIGGING.

1

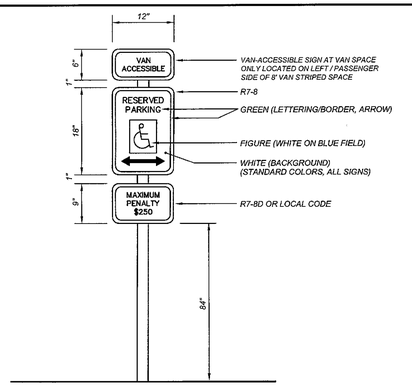

HANDICAP SIGN DETAIL

2

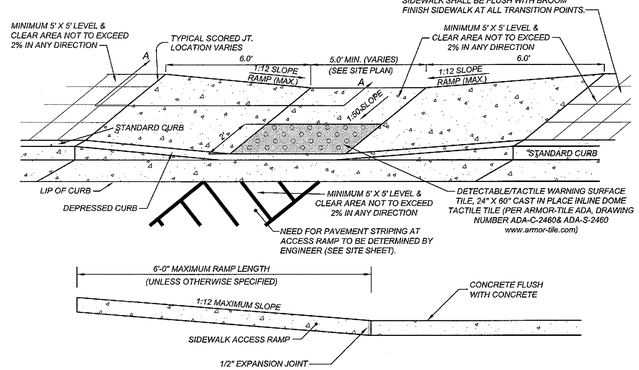

FLUSH HANDICAP RAMP DETAIL

3

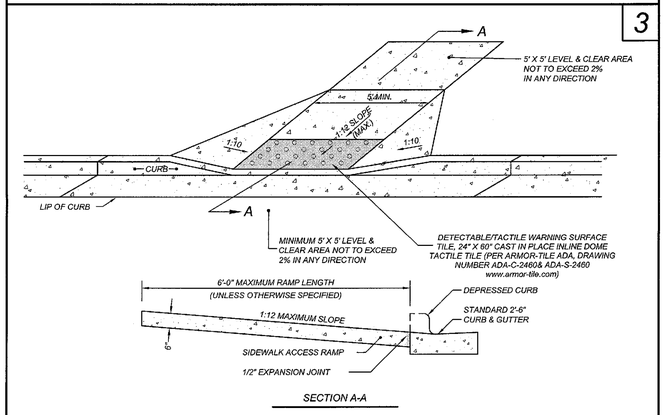

STANDARD HANDICAP RAMP DETAIL

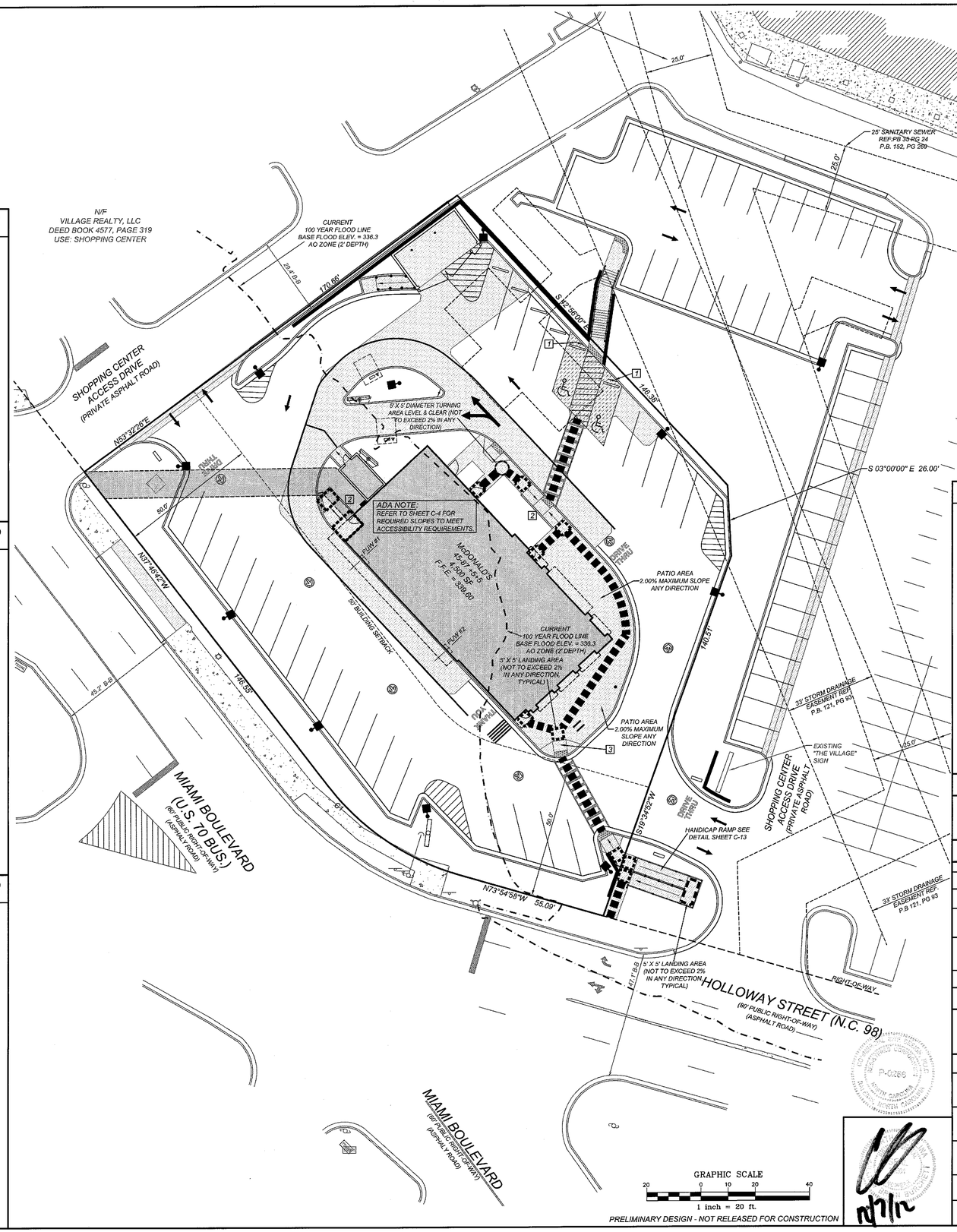

PRELIMINARY DESIGN - NOT RELEASED FOR CONSTRUCTION

LEGEND

- SPILL CURB
- HANDICAP RAMP
- HANDICAP STALL
- CONCRETE
- PROPERTY LINE
- SIGN
- BOLLARD
- EX. FIRE HYDRANT
- FENCE
- POLE MOUNTED AREA LIGHT
- PROPERTY CORNER
- F.F.E. = XXX.XX — FINISH FLOOR ELEVATION
- 5' X 5' DIAMETER TURNING AREA LEVEL & CLEAR (NOT TO EXCEED 2% IN ANY DIRECTION)
- ADA ACCESSIBLE ROUTE (5.0% MAXIMUM LONGITUDAL SLOPE, 2.0% MAXIMUM CROSS SLOPE; EXCLUDING RAMPS)
- 5' X 5' LANDING AREA (NOT TO EXCEED 2% IN ANY DIRECTION)
- HANDICAP PARKING AREA (2% MAX. SLOPE)

PARKING INFORMATION (ON-SITE)

TOTAL SPACES 30	28	SPACES	9'	X	20'	@ 60 °
	2	SPACES	8'	X	20'	@ 60 °

UTILITY INFORMATION

	SIZE	TYPE	LOCATION
SANITARY SEWER	12"	PUBLIC	REAR OF SITE
WATER	6" & 12"	PUBLIC	ALONG STREETS
STORM SEWER	6'	BOX CULVERT	REAR OF SITE
ELECTRIC		OVERHEAD	ALONG STREETS
GAS		PUBLIC	OTHER SIDE OF HOLLOWAY ST.

SURVEY INFORMATION

PREPARED BY: COMMERCIAL SITE DESIGN
8312 CREEDMOOR ROAD
RALEIGH, NC 27613
PH: 919-848-6121 FAX: 919-848-3741
DATE OF SURVEY: 8/1/07 DATE OF MAP: 8/15/07

PLAN SCALE: 1" = 20

STREET ADDRESS
1010 NORTH MIAMI BOULEVARD

CITY	STATE
DURHAM	NORTH CAROLINA

COUNTY
DURHAM

TAX PARCEL NUMBER	LOCATION CODE NUMBER
0831-12-86-7423	32-0135
CSD FILENAME: MCD0708-ADA	

REV	DATE	DESCRIPTION	BY	ISSUE/REF
1	04-05-11	PERMIT ISSUE	RCN	
2	07-27-11	REVISED PER DRB REVIEW #1	JCB	
3	11-28-11	REVISED PER DRB REVIEW #2	JWR	
4	02-15-12	MSPU REVIEW COMMENTS #1	JWR	
5	04-16-12	MSUP REVIEW COMMENTS #2 & DRB REVIEW #3	RCN	
6	06-20-12	REVERT TO ORIGINAL GRADING	RCN	
7	08-23-12	MSUP REVIEW COMMENTS #3	DRG	
8	10-09-12	MSUP REVIEW COMMENTS #5	RCN	
9	10-24-12	FINAL SITE PLAN REVIEW COMMENTS	RCN	
10	12-06-12	REMOVE FEE IN-LIEU SIDEWALK	JWR	

COMMERCIAL SITE DESIGN
(919) 848-6121 FAX: (919) 848-3741
WWW.CSDESIGN.COM
8312 CREEDMOOR ROAD
RALEIGH, NORTH CAROLINA 27613

McDonald's
THESE PLANS AND SPECIFICATIONS ARE THE PROPERTY OF McDONALD'S CORPORATION AND SHALL NOT BE REPRODUCED WITHOUT THEIR WRITTEN PERMISSION.

RALEIGH REGION
OFFICE: 4601 SIX FORKS ROAD - SUITE 200 - RALEIGH, N.C. 27609
ADDRESS:

PLAN APPROVAL
SIGNATURE (2 REQUIRED) — DATE
REGIONAL MGR.
REGIONAL DIRV. DIRECTOR
REGIONAL CONSTRUCTION MGR.
REGIONAL REAL ESTATE MGR.
CO-SIGN SIGNATURES
AREA CONSTRUCTION MGR.
CONTRACTOR

STATUS	DATE	BY
FINAL	-	-
PLAN CHECKED	-	-
AS-BUILT	-	-

C-4
ADA ACCESSIBILITY PLAN AND DETAILS

X:\MCD - McDonalds\0700 Sites\0708 - Durham, NC @ Wellons Village 32-0135\CAD\MCD0708-ADA.dwg, 12/6/2012 3:54:19 PM, janer

PROPOSED STORM DRAINAGE TABLE

LABEL	TYPE	T/C	INVERT	"C"	"I"	"A"	"Q"
CB (1)	CURB INLET	331.77	±327.19	0.95	7.50	0.17	1.21
CB (2)	CATCH BASIN	337.95	325.13	0.95	7.50	0.12	0.86
DMH (3)	DMH	RIM=±330.40 (MATCH ASPHALT)	324.77	0.95	7.50	-	-
CB (4)	DOUBLE INLET CATCH BASIN	337.50	325.00	0.95	7.50	0.33	2.35
CB (5)	CATCH BASIN	337.50	324.69	0.95	7.50	0.03	0.21
DMH (6)	DMH	RIM=330.00	IN (P-7)= 322.08 IN (P-8)= 321.00 OUT = 321.00	0.95	7.50	-	-
CB (7)	CATCH BASIN	329.00	324.50	0.95	7.50	0.05	0.36
CB (8)	CATCH BASIN	329.00	324.40	0.95	7.50	0.07	0.50
DI (9)	DROP INLET	328.00	SANDFILTER	0.95	7.50	0.12	0.86
CB (10)	CATCH BASIN	T/C=±329.60 (MATCH EXISTING)	DOGHOUSE (MATCH EXISTING)	0.95	7.50	-	-
CB (11)	CATCH BASIN	T/C=±329.00 (MATCH EXISTING)	DOGHOUSE (MATCH EXISTING)	0.95	7.50	-	-

PROPOSED STORM PIPE TABLE

LABEL	TYPE	SLOPE	SIZE	LENGTH
P- (1)	VANE DRAIN	2.32%	-	50 LF
P- (2)	RCP	2.58%	15"	80 LF
P- (3)	RCP	0.75%	15"	48 LF
P- (4)	RCP	0.75%	15"	30 LF
P- (5)	RCP	0.75%	15"	50 LF
P- (6)	RCP	0.75%	15"	38 LF
P- (7)	RCP	0.75%	15"	20 LF
P- (8)	RCP	2.00%	15"	5 LF
P- (9)	RCP	0.75%	15"	19 LF
P- (10)	RCP	0.75%	15"	8 LF
P- (11)	RCP	0.75%	15"	35 LF

MAINTENANCE NOTES:

IN GENERAL, ALL EROSION AND SEDIMENT CONTROL MEASURES WILL BE CHECKED AND MAINTAINED DAILY AND AFTER EACH RAINFALL GREATER THAN 0.5 INCHES. ANY SEDIMENT THAT HAS BEEN TRANSPORTED BEYOND THE PROJECT LIMITS SHALL BE REMOVED. THE FOLLOWING ITEMS WILL BE CHECKED IN PARTICULAR:

CONSTRUCTION ENTRANCE:

INSPECT CONSTRUCTION ROADS AND PARKING AREAS PERIODICALLY FOR CONDITION OF SURFACE. TOP DRESS WITH NEW GRAVEL AS NEEDED. CHECK ROAD DITCHES AND OTHER SEEDED AREAS FOR EROSION AND SEDIMENTATION AFTER RUNOFF-PRODUCING RAINS. MAINTAIN ALL VEGETATION IN A HEALTHY, VIGOROUS CONDITION. SEDIMENT PRODUCING AREAS SHOULD BE TREATED IMMEDIATELY.

SILT FENCE:

INSPECT SEDIMENT FENCES AT LEAST ONCE A WEEK AND AFTER EACH RAINFALL. MAKE ANY REQUIRED REPAIRS IMMEDIATELY. SHOULD THE FABRIC OF A SEDIMENT FENCE COLLAPSE, TEAR, DECOMPOSE, OR BECOME INEFFECTIVE, REPLACE IT IMMEDIATELY. REMOVE SEDIMENT DEPOSITS AS NECESSARY TO PROVIDE ADEQUATE STORAGE VOLUME FOR THE NEXT RAIN AND TO REDUCE PRESSURE ON THE FENCE. TAKE CARE TO AVOID UNDERMINING THE FENCE DURING CLEANOUT. REMOVE ALL FENCING MATERIALS AND UNSTABLE SEDIMENT DEPOSITS AND BRING THE AREA TO GRADE AND STABILIZE IT AFTER THE CONTRIBUTING DRAINAGE AREA HAS BEEN PROPERLY STABILIZED.

SILT FENCE GRAVEL OUTLET:

INSPECT SEDIMENT FENCE GRAVEL OUTLETS AT LEAST ONCE A WEEK AND AFTER EACH RAINFALL. MAKE ANY REQUIRED REPAIRS IMMEDIATELY. REMOVE SEDIMENT DEPOSITS AS NECESSARY TO PROVIDE ADEQUATE STORAGE VOLUME FOR THE NEXT RAIN. ANY RIP RAP DISPLACED MUST BE REPLACED IMMEDIATELY.

OUTLET STABILIZATION STRUCTURE:

INSPECT RIP RAP STRUCTURES WEEKLY AND AFTER SIGNIFICANT (0.5 INCH OR GREATER) RAINFALL EVENTS TO SEE IF ANY EROSION AROUND OR BELOW THE RIP RAP HAS TAKEN PLACE, OR IF STONES HAVE BEEN DISLODGED. IMMEDIATELY MAKE ALL NEEDED REPAIRS TO PREVENT FURTHER DAMAGE.

BLOCK AND GRAVEL INLET PROTECTION:

INSPECT THE BARRIER OF AFTER EACH RAIN AND MAKE REPAIRS AS NEEDED. REMOVE SEDIMENT AS NECESSARY TO PROVIDE ADEQUATE STORAGE VOLUME FOR SUBSEQUENT RAINS. WHEN THE CONTRIBUTING DRAINAGE AREA HAS BEEN ADEQUATELY STABILIZED, REMOVE ALL MATERIALS AND ANY UNSTABLE SOIL, AND EITHER SALVAGE OR DISPOSE OF IT PROPERLY. BRING THE DISTURBED AREA TO PROPER GRADE, THEN SMOOTH AND COMPACT IT. APPROPRIATELY STABILIZE ALL BARE AREAS AROUND THE INLET.

TEMPORARY SEEDING IN NORTH CAROLINA

	SEEDING MIXTURE SPECIES	RATE (lb/acre)
LATE WINTER & EARLY SPRING	RYE (GRAIN)	120
	ANNUAL LESPEDEZA (KOBE IN PIEDMONT AND COSTAL PLAIN, KOREAN IN MOUNTAINS	50
	OMIT ANNUAL LESPEDEZA WHEN DURATION OF TEMPORARY COVER IS NOT TO EXTEND BEYOND JUNE.	
SUMMER	GERMAN MILLET	40
	IN THE PIEDMONT AND MOUNTAINS, A SMALL-STEMMED SUNDAGRASS MAY BE SUBSTITUTED AT A RATE OF 50 LB/ACRE.	
FALL	RYE (GRAIN)	120

	SEEDING DATES:
LATE WINTER & EARLY SPRING	MOUNTAINS - ABOVE 2500 ft: FEB. 15 - MAY 15 BELOW 2500 ft: FEB. 1 - MAY 1
	PIEDMONT - JAN. 1 - MAY 1
	COASTAL PLAIN - DEC. 1 - APR. 15
SUMMER	MOUNTAINS - MAY 15 - AUG. 15
	PIEDMONT - MAY 1 - AUG. 15
	COASTAL PLAIN - APR. 15 - AUG. 15
FALL	MOUNTAINS - AUG. 15 - DEC. 15
	COASTAL PLAIN AND PIEDMONT - AUG. 15 - DEC.30

SOIL AMENDMENTS
FOLLOW RECOMMENDATIONS OF SOIL TESTS OR APPLY 2,000 LBS/ACRE GROUND AGRICULTURAL LIMESTONE AND 750 LBS/ACRE 10-10-10 FERTILIZER

MULCH
APPLY 4,000 LBS/ACRE STRAW. ANCHOR STRAW BY TACKING WITH ASPHALT, NETTING OR A MULCH ANCHORING TOOL. A DISK WITH BLADES SET NEARLY STRAIGHT CAN BE USED AS A MULCH ANCHORING TOOL.

MAINTENANCE
REFERTILIZE IF GROWTH IS NOT FULLY ADEQUATE. RESEED, REFERTILIZE AND MULCH IMMEDIATELY FOLLOWING EROSION OR OTHER DAMAGE.

CONSTRUCTION SEQUENCE:

THE CONTRACTOR IS RESPONSIBLE FOR ENSURING THAT EROSION IS MINIMIZED AND THAT COMPLIANCE WITH ALL APPLICABLE FEDERAL, STATE, AND LOCAL LAWS, REGULATIONS, AND ORDINANCES IS MAINTAINED THROUGHOUT EXECUTION OF THIS PROJECT.

1.) OBTAIN A LAND DISTURBING PERMIT. SCHEDULE A PRE-CONSTRUCTION MEETING.

2.) INSTALL GRAVEL CONSTRUCTION PAD, TEMPORARY DIVERSIONS, SILT FENCE, SEDIMENT TRAPS OR OTHER MEASURES AS SHOWN ON THE APPROVED PLAN. CLEAR ONLY AS NECESSARY TO INSTALL THESE DEVICES. SEED TEMPORARY DIVERSIONS, BERMS AND BASINS IMMEDIATELY AFTER CONSTRUCTION. SEE DETAIL ON SEEDING SCHEDULE. CONTRACTOR SHALL BEGIN WITH SEDIMENT FENCING AND ALL OTHER SEDIMENT CONTAINMENT DEVICES FOLLOWED BY ALL DIVERSION AND BY-PASS DITCHES/BERMS.

3.) BEGIN CLEARING/GRUBBING AND GENERAL EXCAVATION ON SITE. IT IS THE RESPONSIBILITY OF THE CONTRACTOR TO PHASE/STAGE EROSION CONTROL TO ALLOW FOR CONSTRUCTION.
NOTE: CONTRACTOR SHALL INSPECT AND REPAIR ALL EROSION DEVICES AT LEAST ONCE A WEEK AND AFTER EVERY RAINFALL. GRADING ACTIVITY SHALL BE PROHIBITED IN THE AREAS OF THE SEDIMENT CONTROL DEVICES/SEDIMENT TRAPS UNTIL THE AREAS UPSTREAM OF THESE DEVICES HAVE BEEN STABILIZED AND APPROVED.

4.) BEGIN INSTALLING UPSTREAM STORM DRAINAGE SYSTEM. INSTALL APPROVED INLET PROTECTION. TERMINATE STORM DRAINAGE SYSTEM AT TEMPORARY SEDIMENT TRAP DEVICES UNTIL SUCH DEVICES HAVE BEEN APPROVED FOR REMOVAL. ADDITIONAL MEASURES MAY BE REQUIRED BY THE INSPECTOR DUE TO THE ROUTING OF THE STORM DRAINAGE SYSTEM AND ACTUAL FIELD CONDITIONS;
NOTE: SEDIMENT BASINS SHALL BE FUNCTIONAL THROUGHOUT GRADING AND EXCAVATING.

5.) STABILIZE SITE AS AREAS ARE BROUGHT UP TO FINISH GRADE WITH VEGETATION, PAVING, DITCH LININGS, ETC.. SEED AND MULCH DENUDED AREAS WITHIN FIFTEEN (15) DAYS OF COMPLETION OF ANY PHASE OF CONSTRUCTION;
NOTE: THE CONTRACTOR SHALL ENSURE THAT THE EROSION CONTROL DEVICES REMAIN UNDISTURBED DURING CONSTRUCTION OF THE BUILDING PADS AND ASSOCIATED PARKING/DRIVE AREAS ADJACENT TO THESE DEVICES UNTIL THE CONTRIBUTING UPSTREAM AREAS HAVE BEEN STABILIZED AND APPROVED.

6.) WHEN SITE IS APPROVED, REMOVE TEMPORARY DIVERSIONS, SILT FENCING, SEDIMENT BASINS, ETC., AND SEED OUT OR PAVE ANY RESULTING BARE AREAS.

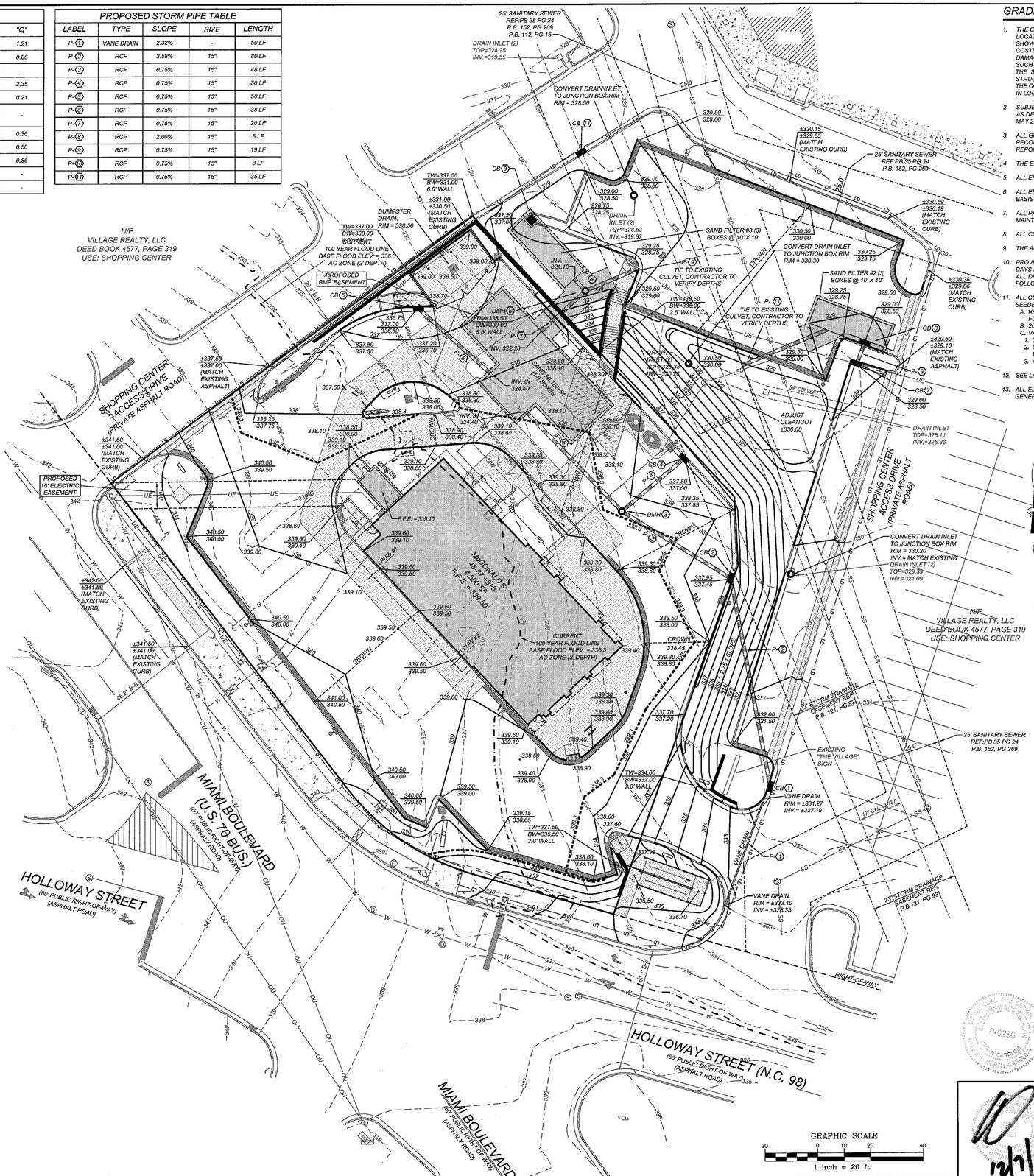

PRELIMINARY DESIGN - NOT RELEASED FOR CONSTRUCTION

GRADING/EROSION CONTROL NOTES:

1. *THE CONTRACTOR SHALL VERIFY LOCATION AND ELEVATION OF ALL UNDERGROUND UTILITIES. THE LOCATION OF ALL EXISTING UTILITIES ARE NOT NECESSARILY SHOWN ON THE PLANS AND WHERE SHOWN ARE ONLY APPROXIMATE. THE CONTRACTOR SHALL ON HIS INITIATIVE AND AT NO EXTRA COSTS HAVE LOCATED ALL UNDERGROUND LINES AND STRUCTURES AS NECESSARY. NO CLAIMS FOR DAMAGES OR EXTRA COMPENSATION SHALL ACCRUE TO THE CONTRACTOR FROM THE PRESENCE OF SUCH PIPE, OTHER OBSTRUCTIONS OR FROM ANY DELAY DUE TO REMOVAL OR REARRANGEMENT OF THE SAME. THE CONTRACTOR SHALL BE RESPONSIBLE FOR ANY DAMAGE TO UNDERGROUND STRUCTURES. THE CONTRACTOR IS RESPONSIBLE FOR CONTACTING ALL NON-SUBSCRIBING UTILITIES. THE CONTRACTOR(S) SHALL CONTACT NORTH CAROLINA "ONE-CALL" AT800-632-4949 FOR ASSISTANCE IN LOCATING EXISTING UTILITIES. CALL AT LEAST 48 HOURS PRIOR TO ANY DIGGING.*
2. *SUBJECT PROPERTY IS LOCATED WITHIN A SPECIAL FLOOD HAZARD ZONE. IT IS LOCATED IN ZONE "AE" AS DEFINED BY FEMA F.I.R.M. COMMUNITY PANEL NUMBER 3720083100J, WITH AN EFFECTIVE DATE OF MAY 2, 2006.*
3. *ALL GRADING AND BACKFILLING, EXCAVATING, ETC., SHALL BE IN ACCORDANCE WITH THE RECOMMENDATIONS SET FORTH IN THE GEOTECHNICAL INVESTIGATION REPORTS. REFER TO THESE REPORTS FOR ADDITIONAL INFORMATION NOT TRANSFERRED TO THESE PLANS.*
4. *THE EROSION CONTROL MEASURES ARE TO BE IN PLACE PRIOR TO ANY EARTHWORK.*
5. *ALL EROSION CONTROL MEASURES SHALL BE MAINTAINED UNTIL DISTURBED AREAS ARE STABILIZED.*
6. *ALL EROSION CONTROL FACILITIES SHALL BE INSPECTED AND REPAIRED AT A MINIMUM OF WEEKLY BASIS AND AFTER EVERY RAIN EVENT.*
7. *ALL PAVED AREAS SHALL BE KEPT CLEAR OF EARTH MATERIALS AND DEBRIS. THE SITE SHALL BE MAINTAINED SO AS TO MINIMIZE SEDIMENT-LADEN RUNOFF TO ANY STORM DRAINAGE SYSTEM.*
8. *ALL CONSTRUCTION TRAFFIC SHALL ENTER AND EXIT THE SITE VIA THE CONSTRUCTION ENTRANCES.*
9. *THE APPROXIMATE AREA OF THE LIMITS OF CLEARING, GRADING AND CONSTRUCTION IS 1.36 ACRES.*
10. *PROVIDE A GROUND COVER (TEMPORARY OR PERMANENT) ON EXPOSED SLOPES WITHIN 21 CALENDAR DAYS FOLLOWING COMPLETION OF ANY PHASE OF GRADING; AND A PERMANENT GROUND COVER FOR ALL DISTURBED AREAS WITHIN 15 WORKING DAYS OR 90 CALENDAR DAYS (WHICHEVER IS SHORTER) FOLLOWING COMPLETION OF CONSTRUCTION OR DEVELOPMENT.*
11. *ALL CUT AND FILL SLOPES AND CHANNEL SIDESLOPES WHICH ARE NOT TO BE PAVED, SHALL BE SEEDED UNTIL A GOOD STAND OF GRASS IS OBTAINED IN ACCORDANCE WITH:*
    A. 100 LBS PER 1,000 SQUARE FOOT GROUND LIMESTONE OR EQUIVALENT. NO SOIL TEST REQUIRED FOR INITIAL ESTABLISHMENT.
    B. 20 LBS OF 10-10-10 FERTILIZER OR EQUIVALENT PEER 1,000 SQUARE FOOT.
    C. VARIETIES TO BE SEEDED:
    1. SPRING SEEDING: MARCH 1 - APRIL 30; SPRING OATS 2.5 LBS PER 1,000 SQUARE FOOT.
    2. SUMMER SEEDING: MAY 1 - AUGUST 1; WEEPING LOVE GRASS AT 2 OZ. PER SQUARE FOOT MIXED WITH 1 BUSHEL OF SAWDUST FOR UNIFORM SEEDING.
    3. ASPHALT MULCH 6 GALLONS PER 1,000 SQUARE FOOT. ALL SEEDING WILL BEE MULCHED.
12. *SEE LANDSCAPE PLAN FOR PERMANENT SEEDING OR SOD SPECIFICATIONS.*
13. *ALL ELEVATIONS SHOWN ARE IN REFERENCE TO THE BENCHMARK AND MUST BE VERIFIED BY THE GENERAL CONTRACTOR AT GROUNDBREAK.*

LEGEND

- STORM DRAIN MANHOLE (DMH)
- DROP INLET (DI)
- CURB INLET (CB)
- STORM PIPE
- TOP OF CURB / BOTTOM OF CURB
- SPILL CURB
- INLINE DRAIN
- ROOF DRAIN (RD): 8" CORRUGATED PLASTIC, 3' MIN. COVER, 1% MIN. SLOPE, PVC IN TRAFFIC AREAS, CLEANOUTS LOCATED @ ALL BENDS
- HANDICAP PARKING AREA (2% MAX. SLOPE)
- TW=XXX.XX / BW=XXX.XX — TW IS GROUND AT TOP OF WALL, BW IS GROUND AT BOTTOM OF WALL
- SILT FENCE OUTLET
- INLET PROTECTION
- BUILDING DOWNSPOUT
- SF — SILT FENCE
- TP — TREE PROTECTION FENCE
- DIVERSION DITCH
- LD — LIMITS OF DISTURBANCE
- FLARED END SECTION
- CONSTRUCTION ENTRANCE

PAVING SPECIFICATIONS

CONTRACTOR TO REFER TO SOILS REPORT PREPARED BY ECS, PROJECT NO. 06:15148 DATED JUNE 29, 2007.
3 INCHES ASPHALT SURFACE (SF9.5A)
9 INCHES AGGREGATE BASE
NOTE:
McDONALD'S ENGINEER RESERVES THE RIGHT TO REQUEST A COMPACTION TEST AND/OR A CORE SAMPLE. IF TESTS PROVE CORRECT, PER ABOVE SPECIFICATION, TESTS WILL BE AT THE EXPENSE OF McDONALD'S, OTHERWISE, GENERAL CONTRACTOR WILL BE CHARGED.

PARKING INFORMATION (ON-SITE)

TOTAL SPACES 30						
	28	SPACES	9'	X	20'	@ 60 °
	2	SPACES	8'	X	20'	@ 60 °

UTILITY INFORMATION

	SIZE	TYPE	LOCATION
SANITARY SEWER	12"	PUBLIC	REAR OF SITE
WATER	6" & 12"	PUBLIC	ALONG STREETS
STORM SEWER	6'	BOX CULVERT	REAR OF SITE
ELECTRIC		OVERHEAD	ALONG STREETS
GAS		PUBLIC	OTHER SIDE OF HOLLOWAY ST.

SURVEY INFORMATION

PREPARED BY: COMMERCIAL SITE DESIGN
8312 CREEDMOOR ROAD
RALEIGH, NC 27613
PH: 919-848-6121 FAX: 919-848-3741
DATE OF SURVEY: 8/1/07 DATE OF MAP: 8/15/07

PLAN SCALE: 1" = 20'

STREET ADDRESS
1010 NORTH MIAMI BOULEVARD

CITY	STATE
DURHAM	NORTH CAROLINA

COUNTY
DURHAM

TAX PARCEL NUMBER	LOCATION CODE NUMBER
0831-12-86-7423	32-0135

CSD FILENAME: MGD0708-GP

12/7/12

REV	DATE	DESCRIPTION	BY	ISSUE/REF
1	04-05-11	PERMIT ISSUE	RCN	
2	07-27-11	REVISED PER DRB REVIEW #1	JCB	
3	11-28-11	REVISED PER DRB REVIEW #2	JWR	
4	02-15-12	MSPU REVIEW COMMENTS #1	JWR	
5	04-16-12	MSUP REVIEW COMMENTS #2 & DRB REVIEW #3	RCN	
6	06-20-12	REVERT TO ORIGINAL GRADING	RCN	
7	08-22-12	MSUP REVIEW COMMENTS #3	DHG	
8	10-09-12	MSUP REVIEW COMMENTS #5	RCN	
9	10-24-12	FINAL SITE PLAN REVIEW COMMENTS	RCN	
10	12-06-12	REMOVE FEE IN-LIEU SIDEWALK	JWR	

COMMERCIAL SITE DESIGN
8312 CREEDMOOR ROAD
RALEIGH, NORTH CAROLINA 27613
(919) 848-6121, FAX: (919) 848-3741
WWW.CSITEDESIGN.COM

McDonald's
RALEIGH REGION
4601 SIX FORKS ROAD - SUITE 200 - RALEIGH, N.C. 27609

THESE PLANS AND SPECIFICATIONS ARE THE PROPERTY OF McDONALD'S CORPORATION AND SHALL NOT BE REPRODUCED WITHOUT THEIR WRITTEN PERMISSION.

OFFICE
ADDRESS

PLAN APPROVAL

SIGNATURE (2 REQUIRED)	DATE
REGIONAL MGR.	
REGIONAL DEV. DIRECTOR	
REGIONAL CONSTRUCTION MGR.	
REGIONAL REAL ESTATE MGR.	
CO-SIGN SIGNATURES	
AREA CONSTRUCTION MGR.	
CONTRACTOR	

STATUS	DATE	BY
FINAL	-	-
PLAN CHECKED	-	-
AS-BUILT	-	-

C-5
GRADING PLAN

X:\MCD - McDonalds\0700 Sites\0708 - Durham, NC @ Wellons Village 32-0135\CAD\MCD0708-GP.dwg, 12/6/2012 3:55:05 PM, janer

MAINTENANCE NOTES:

IN GENERAL, ALL EROSION AND SEDIMENT CONTROL MEASURES WILL BE CHECKED AND MAINTAINED DAILY AND AFTER EACH RAINFALL GREATER THAN 0.5 INCHES. ANY SEDIMENT THAT HAS BEEN TRANSPORTED BEYOND THE PROJECT LIMITS SHALL BE REMOVED. THE FOLLOWING ITEMS WILL BE CHECKED IN PARTICULAR:

CONSTRUCTION ENTRANCE:

INSPECT CONSTRUCTION ROADS AND PARKING AREAS PERIODICALLY FOR CONDITION OF SURFACE. TOP DRESS WITH NEW GRAVEL AS NEEDED. CHECK ROAD DITCHES AND OTHER SEEDED AREAS FOR EROSION AND SEDIMENTATION AFTER RUNOFF-PRODUCING RAINS. MAINTAIN ALL VEGETATION IN A HEALTHY, VIGOROUS CONDITION. SEDIMENT PRODUCING AREAS SHOULD BE TREATED IMMEDIATELY.

SILT FENCE:

INSPECT SEDIMENT FENCES AT LEAST ONCE A WEEK AND AFTER EACH RAINFALL. MAKE ANY REQUIRED REPAIRS IMMEDIATELY. SHOULD THE FABRIC OF A SEDIMENT FENCE COLLAPSE, TEAR, DECOMPOSE, OR BECOME INEFFECTIVE, REPLACE IT IMMEDIATELY. REMOVE SEDIMENT DEPOSITS AS NECESSARY TO PROVIDE ADEQUATE STORAGE VOLUME FOR THE NEXT RAIN AND TO REDUCE PRESSURE ON THE FENCE. TAKE CARE TO AVOID UNDERMINING THE FENCE DURING CLEANOUT. REMOVE ALL FENCING MATERIALS AND UNSTABLE SEDIMENT DEPOSITS AND BRING THE AREA TO GRADE AND STABILIZE IT AFTER THE CONTRIBUTING DRAINAGE AREA HAS BEEN PROPERLY STABILIZED.

SILT FENCE GRAVEL OUTLET:

INSPECT SEDIMENT FENCE GRAVEL OUTLETS AT LEAST ONCE A WEEK AND AFTER EACH RAINFALL. MAKE ANY REQUIRED REPAIRS IMMEDIATELY. REMOVE SEDIMENT DEPOSITS AS NECESSARY TO PROVIDE ADEQUATE STORAGE VOLUME FOR THE NEXT RAIN. ANY RIP RAP DISPLACED MUST BE REPLACED IMMEDIATELY.

OUTLET STABILIZATION STRUCTURE:

INSPECT RIP RAP STRUCTURES WEEKLY AND AFTER SIGNIFICANT (0.5 INCH OR GREATER) RAINFALL EVENTS TO SEE IF ANY EROSION AROUND OR BELOW THE RIP RAP HAS TAKEN PLACE, OR IF STONES HAVE BEEN DISLODGED. IMMEDIATELY MAKE ALL NEEDED REPAIRS TO PREVENT FURTHER DAMAGE.

BLOCK AND GRAVEL INLET PROTECTION:

INSPECT THE BARRIER OF AFTER EACH RAIN AND MAKE REPAIRS AS NEEDED. REMOVE SEDIMENT AS NECESSARY TO PROVIDE ADEQUATE STORAGE VOLUME FOR SUBSEQUENT RAINS. WHEN THE CONTRIBUTING DRAINAGE AREA HAS BEEN ADEQUATELY STABILIZED, REMOVE ALL MATERIALS AND ANY UNSTABLE SOIL, AND EITHER SALVAGE OR DISPOSE OF IT PROPERLY. BRING THE GISTURBED AREA TO PROPER GRADE, THEN SMOOTH AND COMPACT IT. APPROPRIATELY STABILIZE ALL BARE AREAS AROUND THE INLET.

TEMPORARY SEEDING IN NORTH CAROLINA

	SEEDING MIXTURE SPECIES	RATE (lb/acre)
LATE WINTER & EARLY SPRING	RYE (GRAIN)	120
	ANNUAL LESPEDEZA (KOBE IN PIEDMONT AND COSTAL PLAIN, KOREAN IN MOUNTAINS	50
	OMIT ANNUAL LESPEDEZA WHEN DURATION OF TEMPORARY COVER IS NOT TO EXTEND BEYOND JUNE.	
SUMMER	GERMAN MILLET	40
	IN THE PIEDMONT AND MOUNTAINS, A SMALL-STEMMED SUNDAGRASS MAY BE SUBSTITUTED AT A RATE OF 50 LB/ACRE.	
FALL	RYE (GRAIN)	120

SEEDING DATES:

LATE WINTER & EARLY SPRING	MOUNTAINS - ABOVE 2500 ft: FEB. 15 - MAY 15 BELOW 2500 ft: FEB. 1 - MAY 1
	PIEDMONT - JAN. 1 - MAY 1
	COASTAL PLAIN - DEC. 1 - APR. 15
SUMMER	MOUNTAINS - MAY 15 - AUG. 15
	PIEDMONT - MAY 1 - AUG. 15
	COASTAL PLAIN - APR. 15 - AUG. 15
FALL	MOUNTAINS - AUG. 15 - DEC. 15
	COASTAL PLAIN AND PIEDMONT - AUG. 15 - DEC.30

SOIL AMENDMENTS
FOLLOW RECOMMENDATIONS OF SOIL TESTS OR APPLY 2,000 LBS/ACRE GROUND AGRICULTURAL LIMESTONE AND 750 LBS/ACRE 10-10-10 FERTILIZER

MULCH
APPLY 4,000 LBS/ACRE STRAW. ANCHOR STRAW BY TACKING WITH ASPHALT, NETTING OR A MULCH ANCHORING TOOL. A DISK WITH BLADES SET NEARLY STRAIGHT CAN BE USED AS A MULCH ANCHORING TOOL.

MAINTENANCE
REFERTILIZE IF GROWTH IS NOT FULLY ADEQUATE. RESEED, REFERTILIZE AND MULCH IMMEDIATELY FOLLOWING EROSION OR OTHER DAMAGE.

CONSTRUCTION SEQUENCE:

THE CONTRACTOR IS RESPONSIBLE FOR ENSURING THAT EROSION IS MINIMIZED AND THAT COMPLIANCE WITH ALL APPLICABLE FEDERAL, STATE, AND LOCAL LAWS, REGULATIONS, AND ORDINANCES IS MAINTAINED THROUGHOUT EXECUTION OF THIS PROJECT.

1.) OBTAIN A LAND DISTURBING PERMIT. SCHEDULE A PRE-CONSTRUCTION MEETING.

2.) INSTALL GRAVEL CONSTRUCTION PAD, TEMPORARY DIVERSIONS, SILT FENCE, SEDIMENT TRAPS OR OTHER MEASURES AS SHOWN ON THE APPROVED PLAN. CLEAR ONLY AS NECESSARY TO INSTALL THESE DEVICES. SEED TEMPORARY DIVERSIONS, BERMS AND BASINS IMMEDIATELY AFTER CONSTRUCTION. SEE DETAIL ON SEEDING SCHEDULE. CONTRACTOR SHALL BEGIN WITH SEDIMENT FENCING AND ALL OTHER SEDIMENT CONTAINMENT DEVICES FOLLOWED BY ALL DIVERSION AND BY-PASS DITCHES/BERMS.

3.) BEGIN CLEARING/GRUBBING AND GENERAL EXCAVATION ON SITE. IT IS THE RESPONSIBILITY OF THE CONTRACTOR TO PHASE/STAGE EROSION CONTROL TO ALLOW FOR CONSTRUCTION.
NOTE: CONTRACTOR SHALL INSPECT AND REPAIR ALL EROSION DEVICES AT LEAST ONCE A WEEK AND AFTER EVERY RAINFALL. GRADING ACTIVITY SHALL BE PROHIBITED IN THE AREAS OF THE SEDIMENT CONTROL DEVICES/SEDIMENT TRAPS UNTIL THE AREAS UPSTREAM OF THESE DEVICES HAVE BEEN STABILIZED AND APPROVED.

4.) BEGIN INSTALLING UPSTREAM STORM DRAINAGE SYSTEM. INSTALL APPROVED INLET PROTECTION. TERMINATE STORM DRAINAGE SYSTEM AT TEMPORARY SEDIMENT TRAP DEVICES UNTIL SUCH DEVICES HAVE BEEN APPROVED FOR REMOVAL. ADDITIONAL MEASURES MAY BE REQUIRED BY THE INSPECTOR DUE TO THE ROUTING OF THE STORM DRAINAGE SYSTEM AND ACTUAL FIELD CONDITIONS;
NOTE: SEDIMENT BASINS SHALL BE FUNCTIONAL THROUGHOUT GRADING AND EXCAVATING.

5.) STABILIZE SITE AS AREAS ARE BROUGHT UP TO FINISH GRADE WITH VEGETATION, PAVING, DITCH LININGS, ETC., SEED AND MULCH DENUDED AREAS WITHIN FIFTEEN (15) DAYS OF COMPLETION OF ANY PHASE OF CONSTRUCTION;
NOTE: THE CONTRACTOR SHALL ENSURE THAT THE EROSION CONTROL DEVICES REMAIN UNDISTURBED DURING CONSTRUCTION OF THE BUILDING PADS AND ASSOCIATED PARKING/DRIVE AREAS ADJACENT TO THESE DEVICES UNTIL THE CONTRIBUTING UPSTREAM AREAS HAVE BEEN STABILIZED AND APPROVED.

6.) WHEN SITE IS APPROVED, REMOVE TEMPORARY DIVERSIONS, SILT FENCING, SEDIMENT BASINS, ETC., AND SEED OUT OR PAVE ANY RESULTING BARE AREAS.

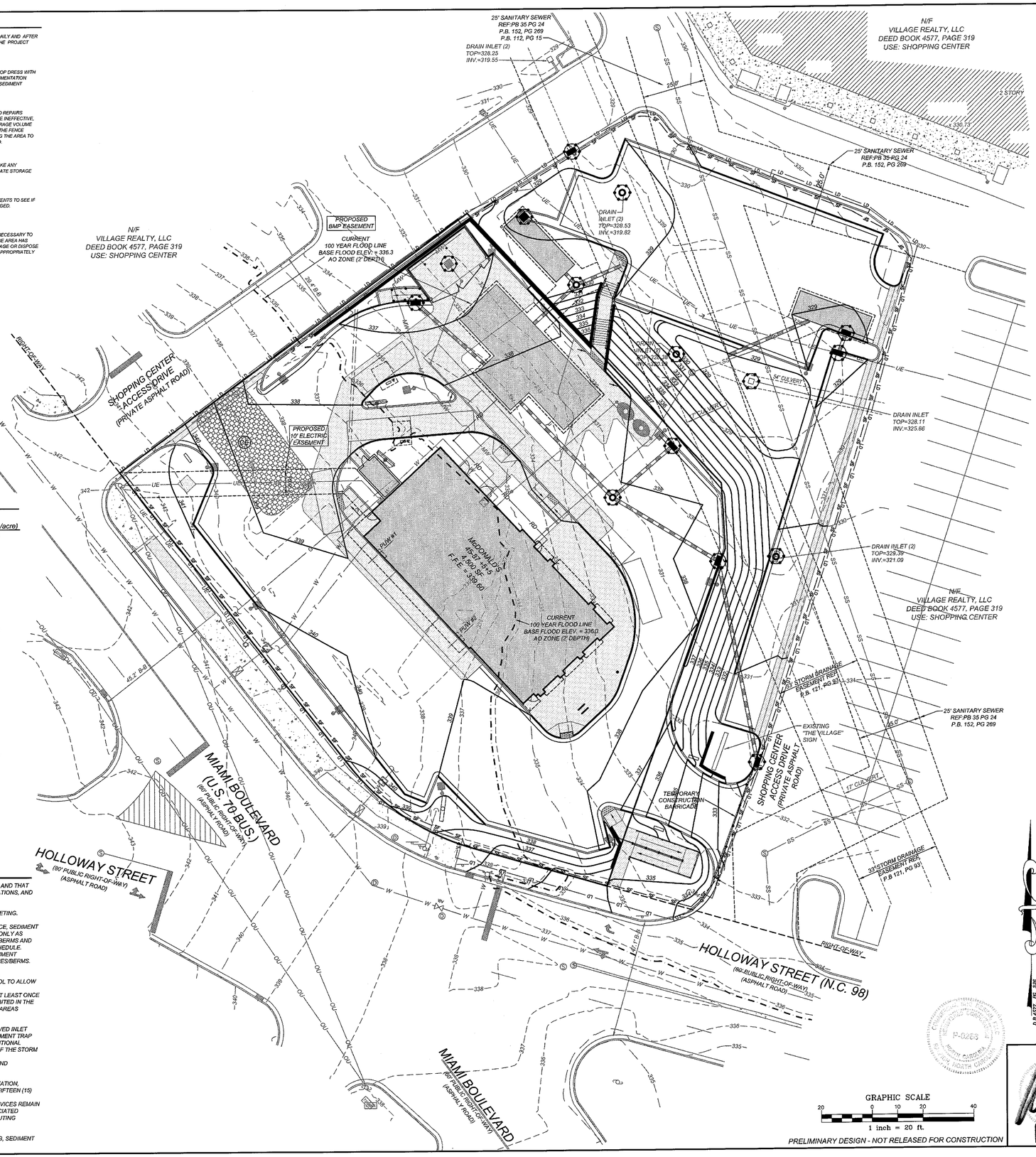

PRELIMINARY DESIGN - NOT RELEASED FOR CONSTRUCTION

GRADING/EROSION CONTROL NOTES:

1. THE CONTRACTOR SHALL VERIFY LOCATION AND ELEVATION OF ALL UNDERGROUND UTILITIES. THE LOCATION OF ALL EXISTING UTILITIES ARE NOT NECESSARILY SHOWN ON THE PLANS AND WHERE SHOWN ARE ONLY APPROXIMATE. THE CONTRACTOR SHALL ON HIS INITIATIVE AND AT NO EXTRA COSTS HAVE LOCATED ALL UNDERGROUND LINES AND STRUCTURES AS NECESSARY. NO CLAIMS FOR DAMAGES OR EXTRA COMPENSATION SHALL ACCRUE TO THE CONTRACTOR FROM THE PRESENCE OF SUCH PIPE, OTHER OBSTRUCTIONS OR FROM ANY DELAY DUE TO REMOVAL OR REARRANGEMENT OF THE SAME. THE CONTRACTOR SHALL BE RESPONSIBLE FOR ANY DAMAGE TO UNDERGROUND STRUCTURES. THE CONTRACTOR IS RESPONSIBLE FOR CONTACTING ALL NON-SUBSCRIBING UTILITIES. THE CONTRACTOR(S) SHALL CONTACT NORTH CAROLINA "ONE-CALL" AT800-632-4949 FOR ASSISTANCE IN LOCATING EXISTING UTILITIES. CALL AT LEAST 48 HOURS PRIOR TO ANY DIGGING.
2. SUBJECT PROPERTY IS LOCATED WITHIN A SPECIAL FLOOD HAZARD ZONE. IT IS LOCATED IN ZONE "AE" AS DEFINED BY FEMA F.I.R.M. COMMUNITY PANEL NUMBER 3720083100J, WITH AN EFFECTIVE DATE OF MAY 2, 2006.
3. ALL GRADING AND BACKFILLING, EXCAVATING, ETC., SHALL BE IN ACCORDANCE WITH THE RECOMMENDATIONS SET FORTH IN THE GEOTECHNICAL INVESTIGATION REPORTS. REFER TO THESE REPORTS FOR ADDITIONAL INFORMATION NOT TRANSFERRED TO THESE PLANS.
4. THE EROSION CONTROL MEASURES ARE TO BE IN PLACE PRIOR TO ANY EARTHWORK.
5. ALL EROSION CONTROL MEASURES SHALL BE MAINTAINED UNTIL DISTURBED AREAS ARE STABILIZED.
6. ALL EROSION CONTROL FACILITIES SHALL BE INSPECTED AND REPAIRED AT A MINIMUM OF WEEKLY BASIS AND AFTER EVERY RAIN EVENT.
7. ALL PAVED AREAS SHALL BE KEPT CLEAR OF EARTH MATERIALS AND DEBRIS. THE SITE SHALL BE MAINTAINED SO AS TO MINIMIZE SEDIMENT-LADEN RUNOFF TO ANY STORM DRAINAGE SYSTEM.
8. ALL CONSTRUCTION TRAFFIC SHALL ENTER AND EXIT THE SITE VIA THE CONSTRUCTION ENTRANCES.
9. THE APPROXIMATE AREA OF THE LIMITS OF CLEARING, GRADING AND CONSTRUCTION IS 1.36 ACRES.
10. PROVIDE A GROUND COVER (TEMPORARY OR PERMANENT) ON EXPOSED SLOPES WITHIN 21 CALENDAR DAYS FOLLOWING COMPLETION OF ANY PHASE OF GRADING; AND A PERMANENT GROUND COVER FOR ALL DISTURBED AREAS WITHIN 15 WORKING DAYS OR 90 CALENDAR DAYS (WHICHEVER IS SHORTER) FOLLOWING COMPLETION OF CONSTRUCTION OR DEVELOPMENT.
11. ALL CUT AND FILL SLOPES AND CHANNEL SIDESLOPES WHICH ARE NOT TO BE PAVED, SHALL BE SEEDED UNTIL A GOOD STAND OF GRASS IS OBTAINED IN ACCORDANCE WITH:
    A. 100 LBS PER 1,000 SQUARE FOOT GROUND LIMESTONE OR EQUIVALENT. NO SOIL TEST REQUIRED FOR INITIAL ESTABLISHMENT.
    B. 20 LBS OF 10-10-10 FERTILIZER OR EQUIVALENT PEER 1,000 SQUARE FOOT.
    C. VARIETIES TO BE SEEDED:
        1. SPRING SEEDING: MARCH 1 - APRIL 30; SPRING OATS 2.5 LBS PER 1,000 SQUARE FOOT.
        2. SUMMER SEEDING: MAY 1 - AUGUST 1; WEEPING LOVE GRASS AT 2 OZ. PER SQUARE FOOT MIXED WITH 1 BUSHEL OF SAWDUST FOR UNIFORM SEEDING.
        3. ASPHALT MULCH 6 GALLONS PER 1,000 SQUARE FOOT. ALL SEEDING WILL BEE MULCHED.
12. SEE LANDSCAPE PLAN FOR PERMANENT SEEDING OR SOD SPECIFICATIONS.
13. ALL ELEVATIONS SHOWN ARE IN REFERENCE TO THE BENCHMARK AND MUST BE VERIFIED BY THE GENERAL CONTRACTOR AT GROUNDBREAK.

EROSION CONTROL LEGEND

- DROP INLET
- CURB INLET
- STORM PIPE
- INLINE DRAIN
- ROOF DRAIN (RD): 8" CORRUGATED PLASTIC, 3' MIN. COVER, 1% MIN. SLOPE, PVC IN TRAFFIC AREAS, CLEANOUTS LOCATED @ ALL BENDS
- FLARED END SECTION
- SILT FENCE OUTLET
- INLET PROTECTION
- BUILDING DOWNSPOUT
- SF — SILT FENCE
- TP — TREE PROTECTION FENCE
- DIVERSION DITCH
- LD — LIMITS OF DISTURBANCE
- CONSTRUCTION ENTRANCE

PAVING SPECIFICATIONS

CONTRACTOR TO REFER TO SOILS REPORT PREPARED BY ECS, PROJECT NO. 06:15148 DATED JUNE 29, 2007.
3 INCHES ASPHALT SURFACE (SF9.5A)
9 INCHES AGGREGATE BASE
NOTE:
McDONALD'S ENGINEER RESERVES THE RIGHT TO REQUEST A COMPACTION TEST AND/OR A CORE SAMPLE. IF TESTS PROVE CORRECT, PER ABOVE SPECIFICATION, TESTS WILL BE AT THE EXPENSE OF McDONALD'S, OTHERWISE, GENERAL CONTRACTOR WILL BE CHARGED.

PARKING INFORMATION (ON-SITE)

TOTAL SPACES 30	28	SPACES	9'	X	20'	@ 60 °
	2	SPACES	8'	X	20'	@ 60 °

UTILITY INFORMATION

	SIZE	TYPE	LOCATION
SANITARY SEWER	12"	PUBLIC	REAR OF SITE
WATER	6" & 12"	PUBLIC	ALONG STREETS
STORM SEWER	6'	BOX CULVERT	REAR OF SITE
ELECTRIC		OVERHEAD	ALONG STREETS
GAS		PUBLIC	OTHER SIDE OF HOLLOWAY ST.

SURVEY INFORMATION

PREPARED BY: COMMERCIAL SITE DESIGN
8312 CREEDMOOR ROAD
RALEIGH, NC 27613
PH: 919-848-6121 FAX: 919-849-3741
DATE OF SURVEY: 8/1/07 DATE OF MAP: 8/15/07

PLAN SCALE: 1" = 20

STREET ADDRESS
1010 NORTH MIAMI BOULEVARD

CITY	STATE
DURHAM	NORTH CAROLINA

COUNTY
DURHAM

TAX PARCEL NUMBER	LOCATION CODE NUMBER
0831-12-86-7423	32-0135

CSD FILENAME: MCD0708-ECP

REV	DATE	DESCRIPTION	BY	ISSUE/REF
1	04-05-11	PERMIT ISSUE	RCN	
2	07-27-11	REVISED PER DRB REVIEW #1	JCB	
3	11-28-11	REVISED PER DRB REVIEW #2	JWR	
4	02-15-12	MSPU REVIEW COMMENTS #1	JWR	
5	04-16-12	MSUP REVIEW COMMENTS #2 & DRB REVIEW #3	RCN	
6	06-20-12	REVERT TO ORIGINAL GRADING	RCN	
7	08-22-12	MSUP REVIEW COMMENTS #3	DHG	
8	10-09-12	MSUP REVIEW COMMENTS #5	RCN	
9	10-24-12	FINAL SITE PLAN REVIEW COMMENTS	RCN	
10	12-06-12	REMOVE FEE IN-LIEU SIDEWALK	JWR	

COMMERCIAL SITE DESIGN
(919) 848-6121, FAX: (919) 849-3741
WWW.CSITEDESIGN.COM
8312 CREEDMOOR ROAD
RALEIGH, NORTH CAROLINA 27613

McDonald's®
THESE PLANS AND SPECIFICATIONS ARE THE PROPERTY OF McDONALD'S CORPORATION AND SHALL NOT BE REPRODUCED WITHOUT THEIR WRITTEN PERMISSION.

RALEIGH REGION
4601 SIX FORKS ROAD - SUITE 200 - RALEIGH, N.C. 27609

PLAN APPROVAL

SIGNATURE (2 REQUIRED)	DATE
REGIONAL MGR.	
REGIONAL DEV. DIRECTOR	
REGIONAL CONSTRUCTION MGR.	
REGIONAL REAL ESTATE MGR.	

CO-SIGN SIGNATURES

AREA CONSTRUCTION MGR.	
CONTRACTOR	

STATUS	DATE	BY
FINAL	-	-
PLAN CHECKED	-	-
AS-BUILT	-	-

C-5a
EROSION CONTROL PLAN

K:\MCD - McDonalds\0700 Sites\0708 - Durham, NC @ Wellons Village 32-0135\CAD\MCD0708-ECP.dwg, 12/6/2012 3:55:40 PM, janer

FLOODPLAIN DEVELOPMENT CALCULATIONS:

TOTAL SITE AREA (ENTIRE SHOPPING CENTER): 435,737 SF OR 10.03 ACRES
TOTAL SITE AREA WITHIN FLOODPLAIN: 148,557 SF OR 3.41 ACRES
TOTAL AREA OF DEVELOPMENT: 57,905 SF OR 1.33 ACRES
TOTAL AREA OF DEVELOPMENT WITHIN FLOODPLAIN: 41,042 SF OR 0.94 ACRES
PERCENTAGE OF DEVELOPMENT WITH THE FLOODPLAIN: 27.6%

TOTAL AREA OF FILL WITHIN FLOODPLAIN = 27,676 SF OR 0.64 ACRES
PERCENTAGE OF FILL WITHIN FLOODPLAIN = 18.6%

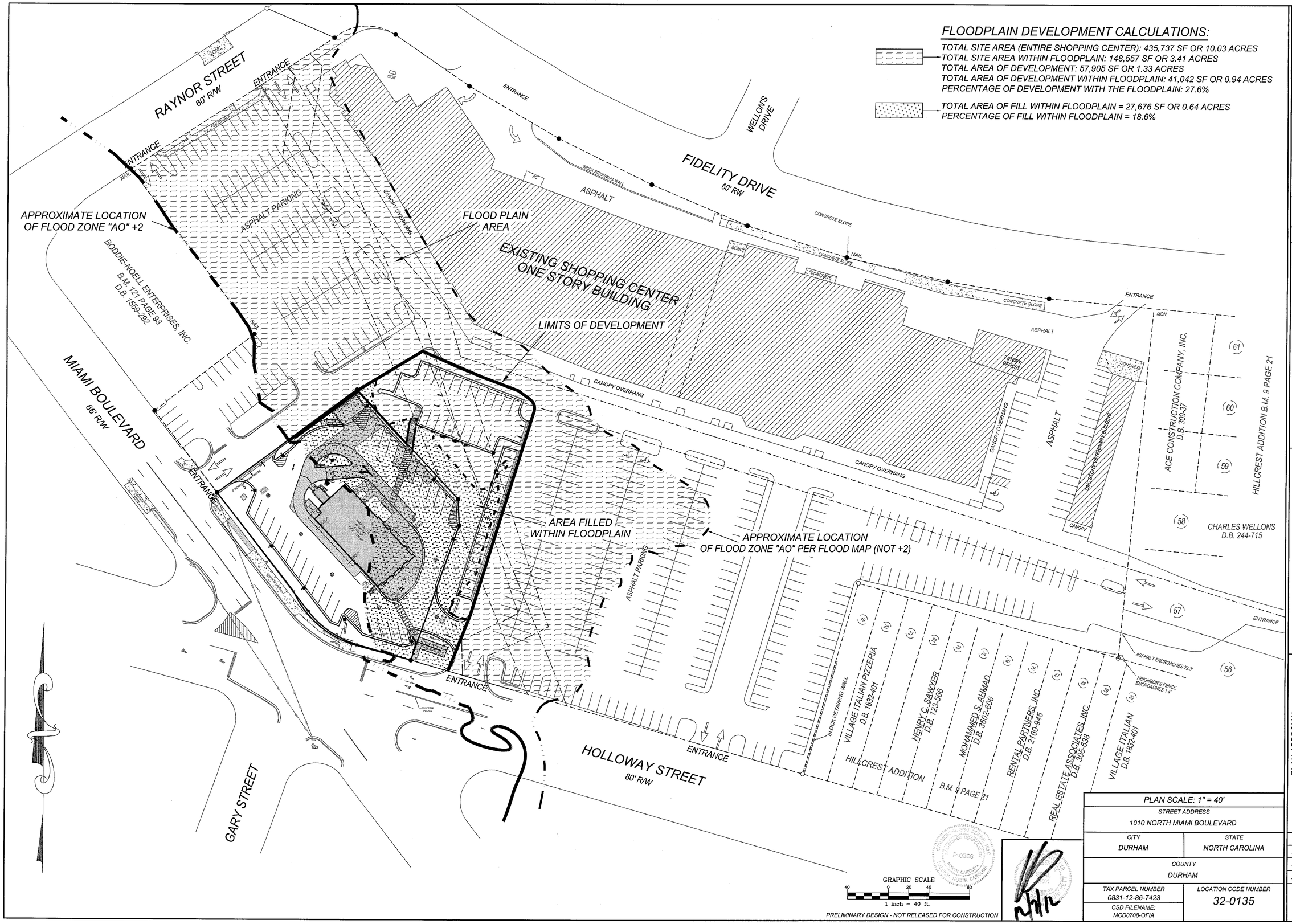

PLAN SCALE: 1" = 40'	
STREET ADDRESS: 1010 NORTH MIAMI BOULEVARD	
CITY: DURHAM	STATE: NORTH CAROLINA
COUNTY: DURHAM	
TAX PARCEL NUMBER: 0831-12-86-7423	LOCATION CODE NUMBER: 32-0135
CSD FILENAME: MCD0708-OFIA	

REV	DATE	DESCRIPTION	BY	ISSUE/REF
1	04-05-11	PERMIT ISSUE	RCN	
2	07-27-11	REVISED PER DRB REVIEW #1	JCB	
3	11-28-11	REVISED PER DRB REVIEW #2	JWR	
4	02-15-12	MSPU REVIEW COMMENTS #1	JWR	
5	04-16-12	MSUP REVIEW COMMENTS #2 & DRB REVIEW #3	RCN	
6	06-20-12	REVERT TO ORIGINAL GRADING	RCN	
7	08-22-12	MSUP REVIEW COMMENTS #3	DHG	
8	10-09-12	MSUP REVIEW COMMENTS #5	RCN	
9	10-24-12	FINAL SITE PLAN REVIEW COMMENTS	RCN	
10	12-06-12	REMOVE FEE IN-LIEU SIDEWALK	JWR	

COMMERCIAL SITE DESIGN
8312 CREEDMOOR ROAD
RALEIGH, NORTH CAROLINA 27615
(919) 848-0271 FAX (919) 848-2731
WWW.CSITEDESIGN.COM

McDonald's®
THESE PLANS AND SPECIFICATIONS ARE THE PROPERTY OF MCDONALD'S CORPORATION AND SHALL NOT BE REPRODUCED WITHOUT THEIR WRITTEN PERMISSION.

OFFICE: RALEIGH REGION
ADDRESS: 4801 SIX FORKS ROAD - SUITE 200 - RALEIGH, N.C. 27609

PLAN APPROVAL

	SIGNATURE (2 REQUIRED)	DATE
REGIONAL MGR.		
REGIONAL DEV. DIRECTOR		
REGIONAL CONSTRUCTION MGR.		
REGIONAL REAL ESTATE MGR.		
AREA CONSTRUCTION MGR.		
CONTRACTOR		

CO-SIGN SIGNATURES

STATUS	DATE	BY
FINAL	-	-
PLAN CHECKED	-	-
AS-BUILT	-	-

C-5b
OVERALL FLOODPLAIN IMPACT ANALYSIS

X:\MCD - McDonalds\0700 Sites\0708 - Durham, NC @ Wellons Village 32-0135\CAD\MCD0708-OFIA.dwg, 12/6/2012 3:56:24 PM, jamer

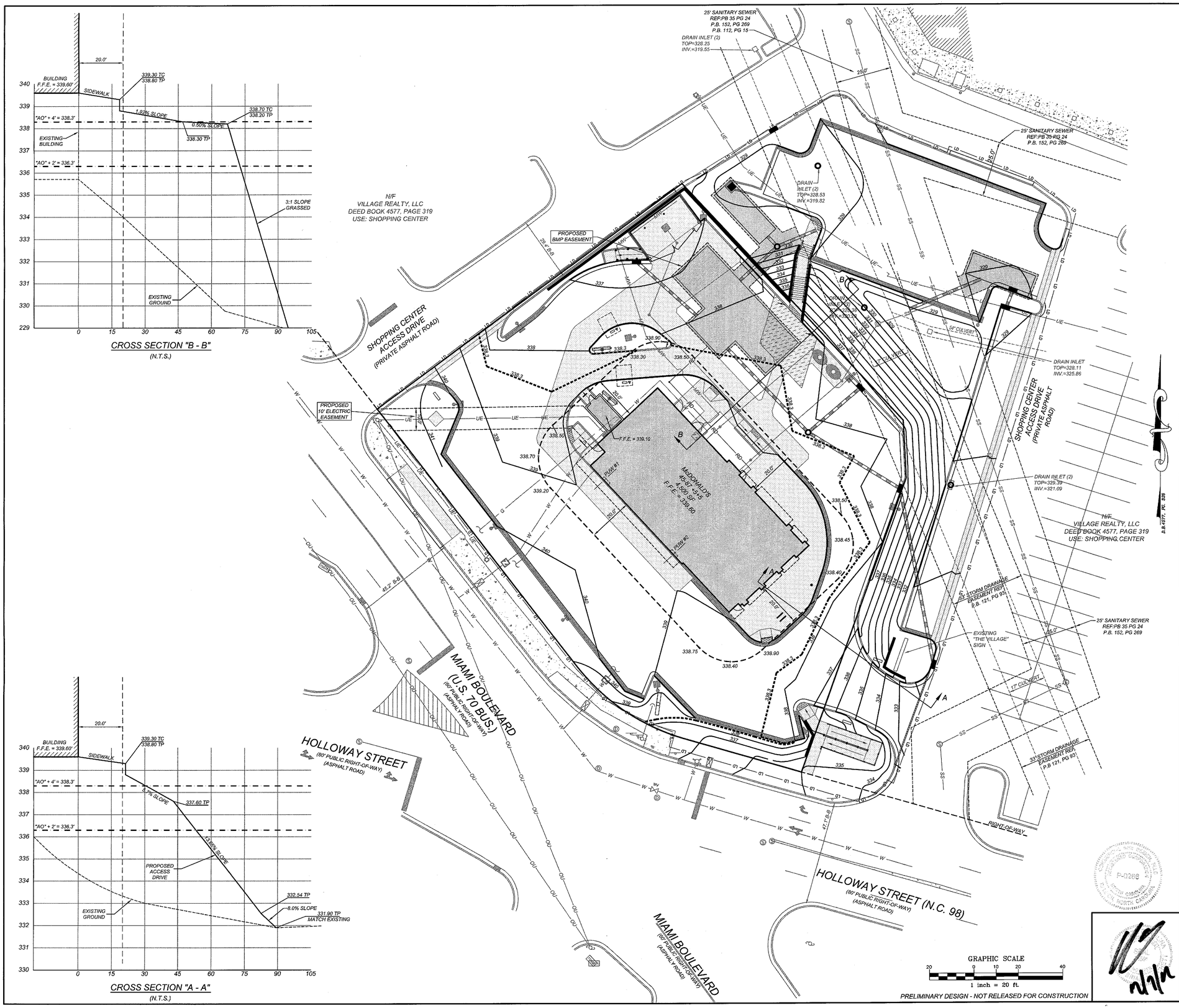

CROSS SECTION "B - B"
(N.T.S.)

CROSS SECTION "A - A"
(N.T.S.)

LEGEND

- STORM DRAIN MANHOLE (DMH)
- DROP INLET (DI)
- CURB INLET (CB)
- STORM PIPE
- TOP OF CURB / BOTTOM OF CURB
- SPILL CURB
- INLINE DRAIN
- ROOF DRAIN (RD): 6" CORRUGATED PLASTIC, 3' MIN. COVER, 1% MIN. SLOPE, PVC IN TRAFFIC AREAS, CLEANOUTS LOCATED @ ALL BENDS
- HANDICAP PARKING AREA (2% MAX. SLOPE)
- TW=XXX.XX TW IS GROUND AT TOP OF WALL
- BW=XXX.XX BW IS GROUND AT BOTTOM OF WALL
- SILT FENCE OUTLET
- INLET PROTECTION
- BUILDING DOWNSPOUT
- SF — SILT FENCE
- TP — TREE PROTECTION FENCE
- DIVERSION DITCH
- LD — LIMITS OF DISTURBANCE
- FLARED END SECTION
- CONSTRUCTION ENTRANCE

PAVING SPECIFICATIONS

CONTRACTOR TO REFER TO SOILS REPORT PREPARED BY ECS, PROJECT NO. 06:15148 DATED JUNE 29, 2007.
3 INCHES ASPHALT SURFACE (SF9.5A)
9 INCHES AGGREGATE BASE
NOTE:
McDONALD'S ENGINEER RESERVES THE RIGHT TO REQUEST A COMPACTION TEST AND/OR A CORE SAMPLE. IF TESTS PROVE CORRECT, PER ABOVE SPECIFICATION, TESTS WILL BE AT THE EXPENSE OF McDONALD'S, OTHERWISE, GENERAL CONTRACTOR WILL BE CHARGED.

PARKING INFORMATION (ON-SITE)

TOTAL SPACES 30	28	SPACES	9'	X	20'	@ 60 °
	2	SPACES	8'	X	20'	@ 60 °

UTILITY INFORMATION

	SIZE	TYPE	LOCATION
SANITARY SEWER	12"	PUBLIC	REAR OF SITE
WATER	6" & 12"	PUBLIC	ALONG STREETS
STORM SEWER	6'	BOX CULVERT	REAR OF SITE
ELECTRIC		OVERHEAD	ALONG STREETS
GAS		PUBLIC	OTHER SIDE OF HOLLOWAY ST.

SURVEY INFORMATION

PREPARED BY: COMMERCIAL SITE DESIGN
8312 CREEDMOOR ROAD
RALEIGH, NC 27613
PH: 919-848-6121 FAX: 919-848-3741
DATE OF SURVEY: 8/1/07 DATE OF MAP: 8/15/07

PLAN SCALE: 1" = 20'

STREET ADDRESS
1010 NORTH MIAMI BOULEVARD

CITY	STATE
DURHAM	NORTH CAROLINA

COUNTY
DURHAM

TAX PARCEL NUMBER	LOCATION CODE NUMBER
0831-12-86-7423	32-0135

CSD FILENAME: MCD0708-FPGE

REV	DATE	DESCRIPTION	BY	ISSUE/REF
1	04-05-11	PERMIT ISSUE	RCN	
2	07-27-11	REVISED PER DRB REVIEW #1	JCB	
3	11-28-11	REVISED PER DRB REVIEW #2	JWR	
4	02-15-12	MSPU REVIEW COMMENTS #1	JWR	
5	04-16-12	MSUP REVIEW COMMENTS #2 & DRB REVIEW #3	RCN	
6	06-20-12	REVERT TO ORIGINAL GRADING	RCN	
7	08-22-12	MSUP REVIEW COMMENTS #3	DHG	
8	10-09-12	MSUP REVIEW COMMENTS #5	RCN	
9	10-24-12	FINAL SITE PLAN REVIEW COMMENTS	RCN	
10	12-06-12	REMOVE FEE IN-LIEU SIDEWALK	JWR	

COMMERCIAL SITE DESIGN
(919) 848-6121, FAX: (919) 848-3741
WWW.CSITEDESIGN.COM
8312 CREEDMOOR ROAD
RALEIGH, NORTH CAROLINA 27613

McDonald's

THESE PLANS AND SPECIFICATIONS ARE THE PROPERTY OF McDONALD'S CORPORATION AND SHALL NOT BE REPRODUCED WITHOUT THEIR WRITTEN PERMISSION.

RALEIGH REGION
OFFICE: 4601 SIX FORKS ROAD - SUITE 200 - RALEIGH, N.C. 27609

PLAN APPROVAL

SIGNATURE (2 REQUIRED)	DATE
REGIONAL MGR.	
REGIONAL DEV. DIRECTOR	
REGIONAL CONSTRUCTION MGR.	
REGIONAL REAL ESTATE MGR.	
CO-SIGN SIGNATURES	
AREA CONSTRUCTION MGR.	
CONTRACTOR	

STATUS	DATE	BY
FINAL	-	-
PLAN CHECKED	-	-
AS-BUILT	-	-

C-5c
FLOODPLAIN GRADING EXHIBIT

X:\MCD - McDonalds\0700 Sites\0708 - Durham, NC @ Wellons Village 32-0135\CAD\MCD0708-FPGE.dwg, 12/6/2012 3:56:53 PM, jsner

UTILITY KEYNOTES:

1. REUSE EXISTING 2" WATER METER, CONTRACTOR SHALL COORDINATE WITH UTILITY (ABANDON EXISTING SERVICE AFTER NEW CONNECTION PER CITY OF DURHAM STANDARDS AND SPECIFICATIONS).
2. 2" DOMESTIC REDUCE PRESSURE BACKFLOW PREVENTER CONTRACTOR SHALL COORDINATE WITH CITY, INSTALL IN ASSE #1060 APPROVED ABOVE GROUND INSULATED ENCLOSURE.
3. 2" DOMESTIC TYPE "K" COPPER WATER SERVICE, CONTRACTOR SHALL COORDINATE WITH CITY, ALL WATER LINES SHALL HAVE A FINAL COVER DEPTH OF 3'-0" IN NON-TRAFFIC AREAS AND 4'-0" IN TRAFFIC AREAS UNLESS OTHERWISE NOTED.
4. 6" TAPPING SLEEVE AND VALVE, CONTRACTOR SHALL FIELD VERIFY LOCATION AND SIZE OF EXISTING WATER MAIN PRIOR TO CONSTRUCTION AND COORDINATE WITH UTILITY COMPANY.
5. EXISTING FIRE HYDRANT.
6. REUSE EXISTING METER FOR IRRIGATION, CONTRACTOR SHALL VERIFY SIZE AND UTILIZE AS IRRIGATION SERVICE, ABANDON EXISTING SERVICE AFTER NEW CONNECTION PER CITY OF DURHAM STANDARDS AND SPECIFICATIONS.
7. 1" IRRIGATION REDUCE PRESSURE BACKFLOW PREVENTER, CONTRACTOR SHALL COORDINATE WITH IRRIGATION CONTRACTOR AND CITY, INSTALL IN ASSE #1060 APPROVED ABOVE GROUND INSULATED ENCLOSURE.
8. COORDINATE IRRIGATION CONNECTION AND SLEEVE SIZE WITH IRRIGATION CONTRACTOR.
9. MIXED WATER TO CAN WASH DUMPSTER AREA (SEE PLUMBING PLANS).
10. 4" PVC SANITARY SEWER LINE (SERVICES SHALL BE PVC SDR 35 WITHIN R/W, THEN PVC SCHEDULE 40 TO BUILDING). (BEDDING AND COVER PER SUPPLIER SPECIFICATIONS) NOTE: 1/4"/FT MINIMUM SLOPE FOR 4" LINES AND 1/8"/FT MINIMUM SLOPE FOR 6" LINES. ALL SEWER LINES SHALL HAVE A FINAL COVER DEPTH OF 4'-0" IN NON-TRAFFIC AREAS AND 5'-0" IN TRAFFIC AREAS UNLESS OTHERWISE NOTED.
11. SANITARY SEWER CLEANOUT PLACED AT 50' INTERVALS, SEE DETAIL SHEET.
12. TRAFFIC RATED SANITARY SEWER CLEANOUT PLACE AT 50' INTERVALS, SEE DETAIL SHEET.
13. 1500 GALLON GREEN TURTLE PROCEPTOR GREASE TRAP, PER DETAIL SHEET, CONTRACTOR SHALL COORDINATE WITH THE CITY (VENT TO ROOF OF BUILDING).
14. TRANSFORMER PAD, CONTRACTOR SHALL COORDINATE LOCATION AND SIZE WITH ELECTRIC UTILITY.
15. POLE MOUNTED AREA LIGHT, SEE LIGHTING PLAN. ALL LOT LIGHT WIRES TO BE CONTINUOUS RUN FROM PANELS TO LOT LIGHTS WITH NO SPLICES, CONTRACTOR TO COORDINATE
16. UNDERGROUND ELECTRIC SERVICE, CONTRACTOR SHALL COORDINATE WITH ELECTRIC UTILITY.
17. INSTALL ONE - 1" PVC ELECTRICAL CONDUIT FOR ELECTRICAL SERVICE TO TRASH CORRAL.
18. UNDERGROUND TELEPHONE SERVICE, CONTRACTOR SHALL COORDINATE WITH TELEPHONE COMPANY.
19. GAS SERVICE.
20. CITY OF DURHAM REQUIRED DRAIN IN TRASH CORRAL, LID TO BE TRAFFIC RATED.
21. INSTALL DOGHOUSE SANITARY SEWER MANHOLE, CONTRACTOR TO FIELD VERIFY SIZE, LOCATION AND ELEVATION OF EXISTING LATERAL PRIOR TO CONSTRUCTION AND COORDINATE WITH CITY.
22. CITY REQUIRES INSTALLATION OF AN ASSE #1013 APPROVED 3/4" REDUCED PRESSURE BACKFLOW PREVENTER ON MIXED WATER SERVICE LINE. CONTRACTOR TO COORDINATE WITH PLUMBING PLANS TO ENSURE THAT ADEQUATE FLOOR DRAINAGE IS PROVIDED INSIDE BUILDING.
23. 6" PVC SEWER LINE @ 6.00% ((BEDDING AND COVER PER SUPPLIER SPECIFICATIONS). NOTE: 1/8"/FT MINIMUM SLOPE FOR 6" LINES. ALL SEWER LINES SHALL HAVE A FINAL COVER DEPTH OF 4'-0" IN NON-TRAFFIC AREAS AND 5'-0" IN TRAFFIC AREAS UNLESS OTHERWISE NOTED.

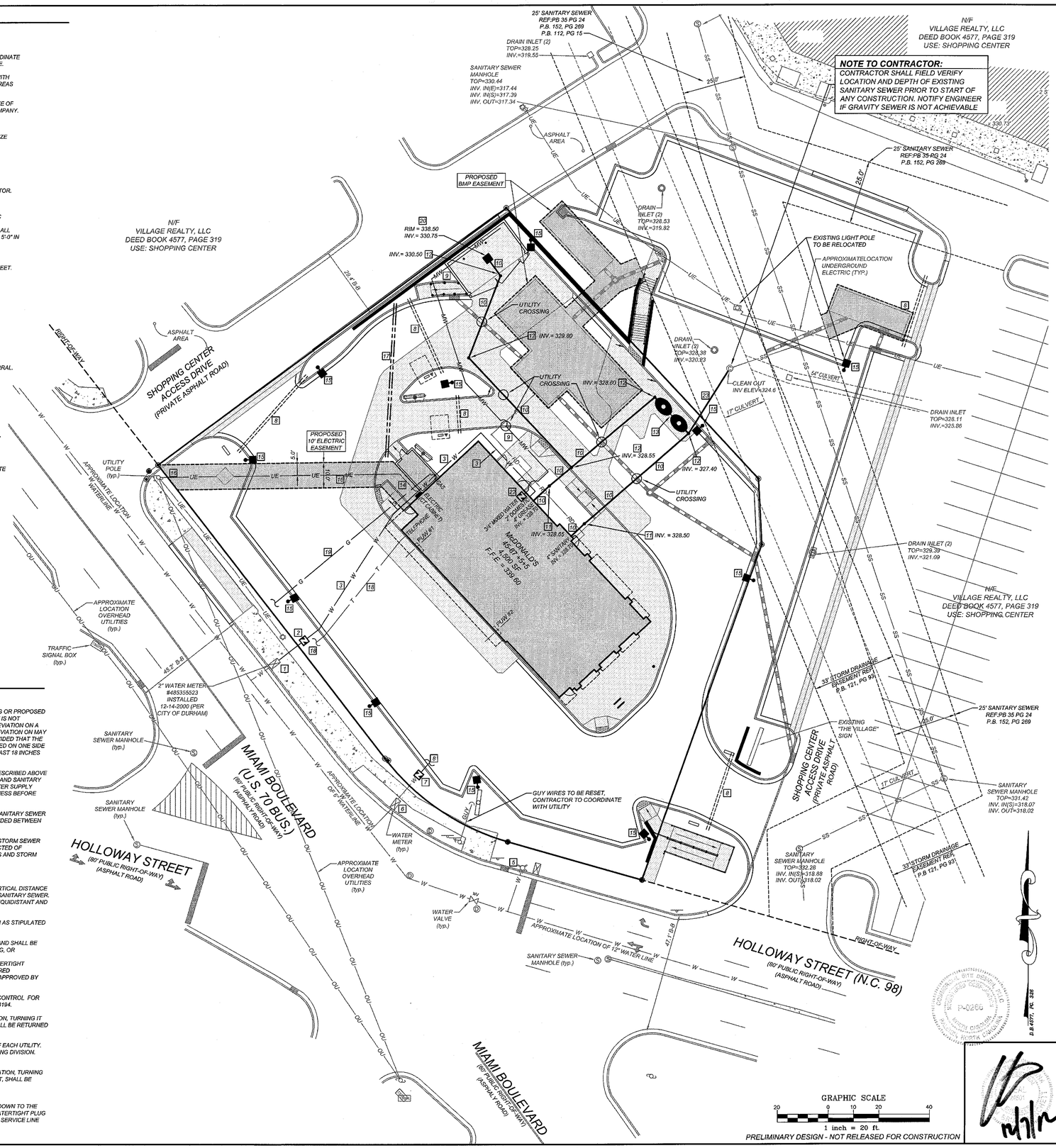

CITY OF DURHAM UTILITY NOTES:

1. HORIZONTAL AND VERTICAL SEPARATION

   A. SANITARY SEWER SHALL BE LAID AT LEAST 10 FEET HORIZONTALLY FROM ANY EXISTING OR PROPOSED WATER MAIN. THE DISTANCE SHALL BE MEASURED EDGE TO EDGE. IN CASES WHERE IT IS NOT PRACTICAL TO MAINTAIN A 10 FOOT SEPARATION, THE CITY OF DURHAM MAY ALLOW DEVIATION ON A CASE-BY-CASE BASIS, IF SUPPORTED BY DATE FROM THE DESIGN ENGINEER. SUCH DEVIATION ON MAY ALLOW THE INSTALLATION OF THE SANITARY SEWER CLOSER TO A WATER MAIN, PROVIDED THAT THE WATER MAIN IS IN A SEPARATE TRENCH OR ON AN UNDISTURBED EARTH SHELF LOCATED ON ONE SIDE IF THE SANITARY AND AT AN ELEVATION SO THE BOTTOM OF THE WATER MAIN IS AT LEAST 18 INCHES ABOVE THE TOP OF THE SEWER.

   B. IF IT IS IMPOSSIBLE TO OBTAIN PROPER HORIZONTAL AND VERTICAL SEPARATION AS DESCRIBED ABOVE OR ANYTIME THE SANITARY SEWER IS OVER THE WATER MAIN, BOTH THE WATER MAIN AND SANITARY SEWER MUST BE CONSTRUCTED OF FERROUS PIPE COMPLYING WITH THE PUBLIC WATER SUPPLY DESIGN STANDARDS AND BE PRESSURE TESTED TO 150 PSI TO ASSURE WATER TIGHTNESS BEFORE BACKFILLING.

   C. A 12-INCH VERTICAL SEPARATION SHALL BE PROVIDED BETWEEN STORM SEWER AND SANITARY SEWER LINES OR FERROUS PIPE SPECIFIED. A 12-INCH VERTICAL SEPARATION SHALL BE PROVIDED BETWEEN STORM SEWER AND WATER MAINS.

      1. IF A 12-INCH VERTICAL SEPARATION IS NOT MAINTAINED AT A CROSSING BETWEEN STORM SEWER AND WATER MAINS (OR PRESSURE SEWERS), THE WATER MAIN SHALL BE CONSTRUCTED OF FERROUS PIPE AND A CONCRETE COLLAR SHALL BE POURED AROUND WATER MAINS AND STORM SEWER TO IMMOBILIZE THE CROSSING.

2. CROSSINGS

   A. SANITARY SEWER CROSSING WATER MAINS SHALL BE LAID TO PROVIDE A MINIMUM VERTICAL DISTANCE OF 18 INCHES BETWEEN THE OUTSIDE OF THE WATER MAIN AND THE OUTSIDE OF THE SANITARY SEWER. THE CROSSING SHALL BE ARRANGED SO THAT THE SANITARY SEWER JOINTS WILL BE EQUIDISTANT AND AS FAR AS POSSIBLE FROM THE WATER MAIN JOINTS.

   B. WHEN IT IS IMPOSSIBLE TOM OBTAIN PROPER HORIZONTAL AND VERTICAL SEPARATION AS STIPULATED ABOVE, ONE OF THE FOLLOWING METHODS MUST BE SPECIFIED.

      1. THE SANITARY SEWER SHALL BE DESIGNED AND CONSTRUCTED OF FERROUS PIPE AND SHALL BE PRESSURE TESTED AT 150 PSI TO ASSURE WATER TIGHTNESS PRIOR TO BACKFILLING, OR

      2. EITHER THE WATER MAIN OR THE SANITARY SEWER LINE MAY BE ENCASED IN A WATERTIGHT CARRIER PIPE, WHICH EXTENDS 10 FEET ON BOTH SIDES OF THE CROSSING, MEASURED PERPENDICULAR TO THE WATER MAIN. THE CARRIER PIPE SHALL BE OF MATERIALS APPROVED BY THE CITY OF DURHAM FOR USE IN WATER MAIN CONSTRUCTION

3. BEFORE INSTALLATION OF ANY BACKFLOW PREVENTERS CONTACT CROSS CONNECTION CONTROL FOR CITY OF DURHAM REGULATIONS, INSTALLATION REQUIREMENTS AND PERMIT AT (919) 560-4194.

4. ABANDONMENT OF WATER SERVICES SHALL INCLUDE EXCAVATING DOWN TO CORPORATION, TURNING IT OFF AND CUTTING SERVICE LINE FREE FROM CORPORATION. THE METER, IF PRESENT SHALL BE RETURNED TO CITY OF DURHAM.

5. A UTILITY MAINLINE CONSTRUCTION PERMIT IS REQUIRED PRIOR TO THE INSTALLATION OF EACH UTILITY. ALL UTILITIES SHALL SUBMIT PLAN DRAWINGS AND APPLICATIONS TO THE CITY ENGINEERING DIVISION.

   A. WATER SERVICE ABANDONMENT:
      ABANDONMENT OF WATER SERVICES SHALL INCLUDE EXCAVATING DOWN TO CORPORATION, TURNING IT OFF AND CUTTING SERVICE LINE FREE FROM CORPORATION. THE METER, IF PRESENT, SHALL BE RETURNED TO CITY OF DURHAM.

   B. SANITARY SEWER SERVICE ABANDONMENT:
      ABANDONMENT OF SANITARY SEWER SERVICE LINES SHALL CONSIST OF EXCAVATING DOWN TO THE SERVICE CONNECTION TO THE MAIN, SUTTING THIS CONNECTION AND INSTALLING A WATERTIGHT PLUG IN THE MAIN. ALL CLEAN-OUT RISERS ON THE SERVICE LINE SHOULD BE REMOVED. THE SERVICE LINE CAN BE ABANDONED IN PLACE.

UTILITY NOTES:

1. THE CONTRACTOR SHALL VERIFY LOCATION AND ELEVATION OF ALL UNDERGROUND UTILITIES. THE LOCATION OF ALL EXISTING UTILITIES ARE NOT NECESSARILY SHOWN ON THE PLANS AND WHERE SHOWN ARE ONLY APPROXIMATE. THE CONTRACTOR SHALL ON HIS INITIATIVE AND AT NO EXTRA COSTS HAVE LOCATED ALL UNDERGROUND LINES AND STRUCTURES AS NECESSARY. NO CLAIMS FOR DAMAGES OR EXTRA COMPENSATION SHALL ACCRUE TO THE CONTRACTOR FROM THE PRESENCE OF SUCH PIPE, OTHER OBSTRUCTIONS OR FROM ANY DELAY DUE TO REMOVAL OR REARRANGEMENT OF THE SAME. THE CONTRACTOR SHALL BE RESPONSIBLE FOR ANY DAMAGE TO UNDERGROUND STRUCTURES. THE CONTRACTOR IS RESPONSIBLE FOR CONTACTING ALL NON-SUBSCRIBING UTILITIES. THE CONTRACTOR(S) SHALL CONTACT NORTH CAROLINA "ONE CALL" AT 800-632-4949 FOR ASSISTANCE IN LOCATING EXISTING UTILITIES. CALL AT LEAST 48 HOURS PRIOR TO ANY DIGGING.
2. UTILITY INFORMATION SHOWN HEREON WAS OBTAINED FROM THE BEST AVAILABLE SOURCE AND MAY OR MAY NOT BE EITHER ACCURATE OR COMPLETE. THE GENERAL CONTRACTOR IS RESPONSIBLE FOR VERIFYING EXACT LOCATIONS OF EXISTING UTILITIES AND IS RESPONSIBLE FOR ANY DAMAGE TO ANY UTILITIES, EITHER PUBLIC OR PRIVATE, SHOWN HEREON OR NOT SHOWN HEREON. ANY REPAIRS SHALL BE DONE TO THE SATISFACTION OF THE APPROPRIATE UTILITY COMPANY.
3. THE GENERAL CONTRACTOR SHALL CONFIRM ALL NEW UTILITY TAP LOCATIONS WITH THE UTILITY OWNERS.
4. IT IS THE RESPONSIBILITY OF THE GENERAL CONTRACTOR TO VERIFY THE ACTUAL LOCATION AND AVAILABILITY OF ALL EXISTING AND PROPOSED UTILITIES IN THE FIELD PRIOR TO GROUND BREAKING.
5. MINIMUM COVER FOR CONDUITS SHALL BE 36 INCHES UNLESS OTHERWISE SHOWN OR NOTED ON THESE PLANS.
6. ALL MANHOLES, VALVES AND MONUMENT FRAMES SHALL BE SET TO FINISH GRADE AFTER PAVING.
7. THE CONTRACTOR SHALL COMPLY WITH THE RULES AND REGULATIONS OF THE STATE CONSTRUCTION SAFETY ORDERS. TRENCHES SHALL BE SHORED IN ACCORDANCE WITH OSHA.
8. OCCUPATIONAL HEALTH AND SAFETY ADMINISTRATION (OSHA) STANDARDS FOR EXCAVATIONS; FINAL RULE 29CFR PART 1926, SUBPART "P" APPLIES TO ALL EXCAVATIONS EXCEEDING 5 FEET IN DEPTH. EXCAVATION EXCEEDING TWENTY (20) FEET IN DEPTH REQUIRES THE DESIGN OF A TRENCH SAFETY SYSTEM BY A REGISTERED PROFESSIONAL ENGINEER.
9. EQUIPMENT AND PRODUCTS OTHER THAN THOSE SPECIFIED MAY BE USED PROVIDED PRIOR APPROVAL HAS BEEN OBTAINED FROM THE OWNER IN WRITING PRIOR TO ORDERING OR INSTALLATION. THE CONSTRUCTION SHALL WAIVE ANY CLAIM FOR ADDITIONAL COST RELATED TO THE SUBSTITUTION OF ALTERNATE EQUIPMENT.
10. CONTRACTOR SHALL MAINTAIN AN "AS-BUILT" SET OF DRAWINGS TO RECORD THE EXACT LOCATION OF ALL PIPING PRIOR TO CONCEALMENT. DRAWINGS SHALL BE GIVEN TO THE OWNER UPON COMPLETION OF THE PROJECT WITH A COPY OF THE TRANSMITTAL LETTER TO THE ENGINEER.
11. ALL UTILITY CONSTRUCTION SHALL BE IN ACCORDANCE WITH THE CITY OF DURHAM PUBLIC UTILITIES AND CROSS CONNECTION CONTROL REGULATIONS AND STANDARDS.
12. SITE UTILITY CONTRACTOR TO PROVIDE WATER, SANITARY SEWER, AND ROOF DRAIN LEADERS TO WITHIN 5 FEET OF THE BUILDING. CONTRACTOR SHALL COORDINATE SITE PLAN CONNECTIONS WITH THE ARCHITECTURAL BUILDING PLANS.
13. UNDERGROUND CONDUITS TO SIGNS, LOT LIGHTS, ETC., SHALL BE PLACED IN GRASS OR LANDSCAPE AREAS WHENEVER POSSIBLE. THE LOCATION OF THE CONDUIT AS SHOWN ON THESE PLANS SHALL BE CONSIDERED TO BE SCHEMATIC WITH ACTUAL LOCATION TO BE VERIFIED BY THE GENERAL CONTRACTOR. PVC SHC. 40 SLEEVES SHALL BE INSTALLED FOR ALL CONDUIT CROSSING UNDER PAVED AREAS.
14. THE CONTRACTOR SHALL COORDINATE WITH ALL UTILITY COMPANIES TO DETERMINE EXACT POINT OF SERVICE CONNECTION AT EXISTING UTILITY. REFER TO THE BUILDING ELECTRICAL AND PLUMBING DRAWINGS FOR UTILITY SERVICE ENTRANCE LOCATIONS, SIZES AND CIRCUITING.

LEGEND

OU — OVERHEAD UTILITIES	SEWER CLEAN OUT
SANITARY SEWER	FIRE HYDRANT ASSEMBLY
UE — UNDERGROUND ELECTRIC	SANITARY SEWER MANHOLE
T — TELEPHONE LINE	POLE MOUNTED AREA LIGHT
G — GAS LINE	WATER METER
W — WATER LINE	BACKFLOW PREVENTER
F — FIRE LINE	SIAMESE CONNECTION (FDC)
IRRIGATION SLEEVE (1) 4" PVC. COORDINATE WITH IRRIGATION CONTRACTOR	WATER VALVE
UTILITY POLE	GREASE TRAP

PARKING INFORMATION (ON-SITE)

TOTAL SPACES						
30	28	SPACES	9'	X	20'	@ 60 °
	2	SPACES	8'	X	20'	@ 60 °

UTILITY INFORMATION

	SIZE	TYPE	LOCATION
SANITARY SEWER	12"	PUBLIC	REAR OF SITE
WATER	6" & 12"	PUBLIC	ALONG STREETS
STORM SEWER	6'	BOX CULVERT	REAR OF SITE
ELECTRIC		OVERHEAD	ALONG STREETS
GAS		PUBLIC	OTHER SIDE OF HOLLOWAY ST.

SURVEY INFORMATION

PREPARED BY: COMMERCIAL SITE DESIGN
8312 CREEDMOOR ROAD
RALEIGH, NC 27613
PH: 919-848-6121 FAX: 919-848-3741
DATE OF SURVEY: 8/1/07 DATE OF MAP: 8/15/07

PLAN SCALE: 1" = 20

STREET ADDRESS
1010 NORTH MIAMI BOULEVARD

CITY	STATE
DURHAM	NORTH CAROLINA

COUNTY
DURHAM

TAX PARCEL NUMBER	LOCATION CODE NUMBER
0831-12-86-7423	32-0135

CSD FILENAME: MCD0708-UP

REV	DATE	DESCRIPTION	BY	ISSUE/REF
1	04-05-11	PERMIT ISSUE	RCN	
2	07-27-11	REVISED PER DRB REVIEW #1	JCB	
3	11-28-11	REVISED PER DRB REVIEW #2	JWR	
4	02-15-12	MSPU REVIEW COMMENTS #1	JWR	
5	04-16-12	MSUP REVIEW COMMENTS #2 & DRB REVIEW #3	RCN	
6	06-20-12	REVERT TO ORIGINAL GRADING	RCN	
7	08-22-12	MSUP REVIEW COMMENTS #3	DHG	
8	10-09-12	MSUP REVIEW COMMENTS #5	RCN	
9	10-24-12	FINAL SITE PLAN REVIEW COMMENTS	RCN	
10	12-06-12	REMOVE FEE IN-LIEU SIDEWALK	JWR	

COMMERCIAL SITE DESIGN
(919) 848-6121, FAX: (919) 848-3741
WWW.CSITEDESIGN.COM
8312 CREEDMOOR ROAD
RALEIGH, NORTH CAROLINA 27613

McDonald's
THESE PLANS AND SPECIFICATIONS ARE THE PROPERTY OF MACDONALD'S CORPORATION AND SHALL NOT BE REPRODUCED WITHOUT THEIR WRITTEN PERMISSION.

RALEIGH REGION
OFFICE: 4601 SIX FORKS ROAD - SUITE 200 - RALEIGH, N.C. 27609
ADDRESS:

PLAN APPROVAL
SIGNATURE (2 REQUIRED) | DATE
REGIONAL MGR.
REGIONAL DEV. DIRECTOR
REGIONAL CONSTRUCTION MGR.
REGIONAL REAL ESTATE MGR.
CO-SIGN SIGNATURES
AREA CONSTRUCTION MGR.
CONTRACTOR

STATUS	DATE	BY
FINAL	-	-
PLAN CHECKED	-	-
AS-BUILT	-	-

C-6
UTILITY PLAN

K:\MCD - McDonalds\0700 Sites\0708 - Durham, NC @ Wellons Village 32-0135\CADM\CD0708-UP.dwg, 12/6/2012 3:57:25 PM, janer

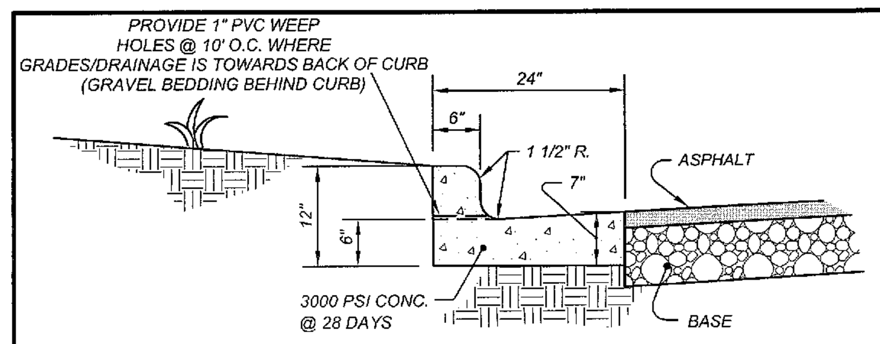

STANDARD CURB & GUTTER

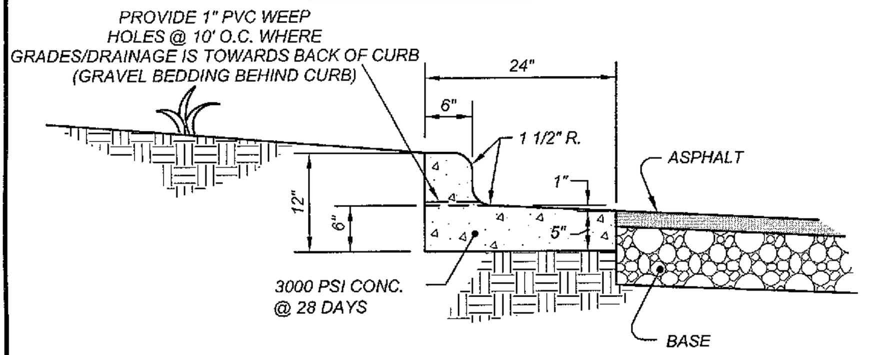

SPILL CURB & GUTTER

NOTES:
1. SCORE CURB / VALLEY GUTTER AT 15' O.C.
2. PROVIDE 1/2" EXPANSION JOINTS AT 90' O.C.
3. CONTRACTION JOINTS SHALL BE SPACED AT 10' INTERVALS. (A 15' SPACING WILL BE ALLOWED WHEN A MACHINE IS USED.)
4. FINISH ALL CONCRETE WITH CURING COMPOUND.

2'-0" STANDARD CURB AND GUTTER

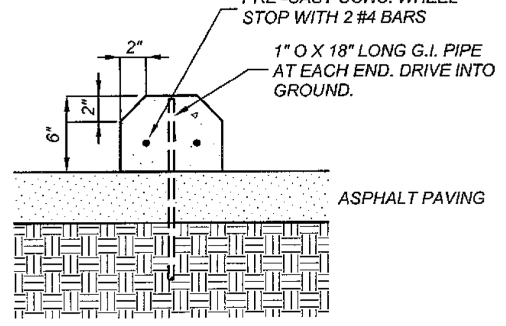

SECTION

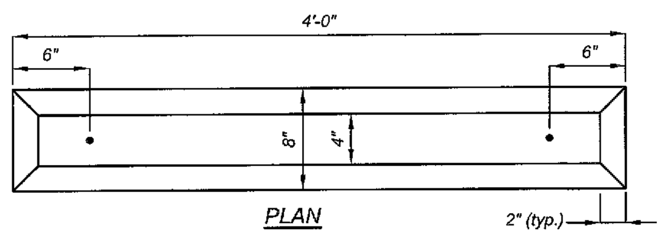

PLAN

CONCRETE WHEEL STOP

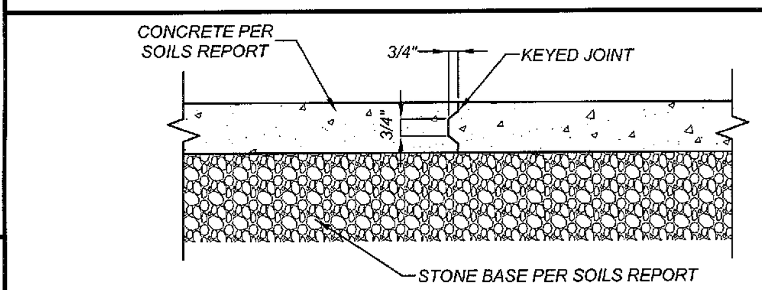

CONSTRUCTION JOINT

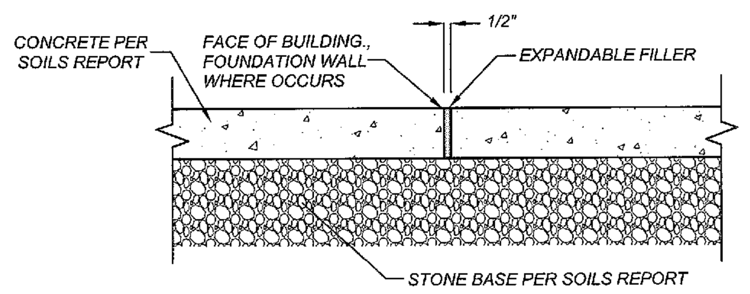

EXPANSION JOINT

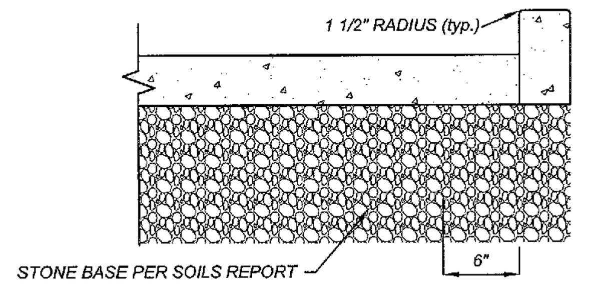

SLAB EDGE

CONCRETE SLAB DETAIL

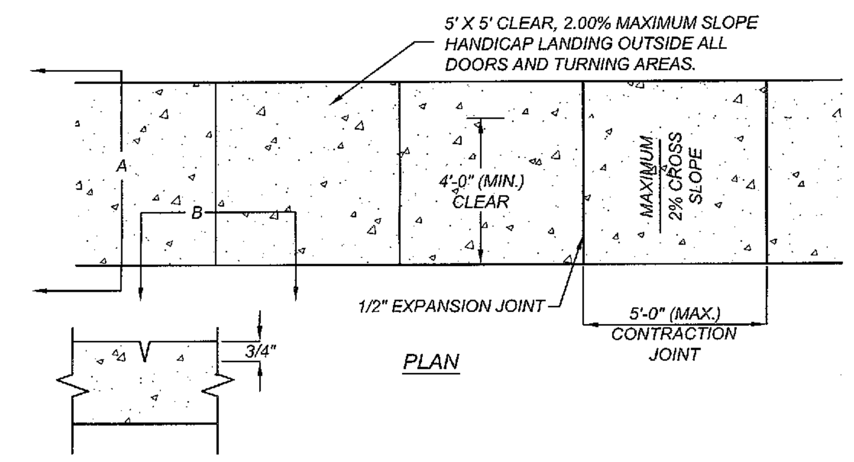

PLAN

SECTION B-B
CONTRACTION JOINT

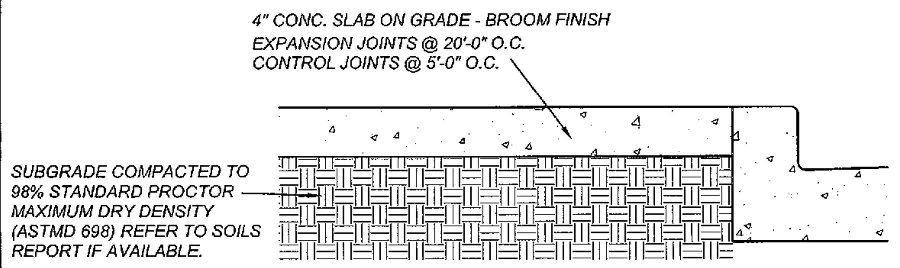

SECTION A-A

BROOM FINISH ACCESS CONCRETE SIDEWALK

ISLAND LAYOUT/DRIVE-THRU ELEMENTS NOTES - PRIMARY LANE:

1. DETERMINE THE DISTANCE TO THE CENTERLINE OF THE COD FACE ONLY AFTER THE CONCRETE CURB HAS BEEN EITHER FORMED OR POURED.
2. ONCE THE CONCRETE CURB HAS BEEN FORMED OR POURED, ESTABLISH THE BENCHMARK DISTANCE FROM THE **CENTERLINE OF THE OPEN CASH BOOTH WINDOW (NOT CENTERLINE OF OPENING) TO THE CENTERLINE OF THE COD FACE** ; MEASURING FIVE (5) FEET FROM THE FACE OF CURB.
3. ESTABLISH THE BENCHMARK AT THE CENTERLINE OF COD FACE, AT THE FACE OF CURB. USE THIS BENCHMARK TO DETERMINE THE FOUNDATION LOCATIONS FOR THE COD AND THE MENU BOARD.
4. DIMENSIONS TO COD AND MENU BOARD LOCATIONS REFERENCE CIRCULAR FOUNDATION CENTERPOINTS. REFER TO FOUNDATION DETAILS FOR FOUNDATION DIAMETERS AND INSTALLATION REQUIREMENTS ABUTTING CONCRETE CURBS.
5. MENU BOARD TO BE SET AT A 45 DEGREE ANGLE, REFERENCED ALONG THE STRAIGHT CONCRETE CURB SECTION OF THE PRIMARY LANE.

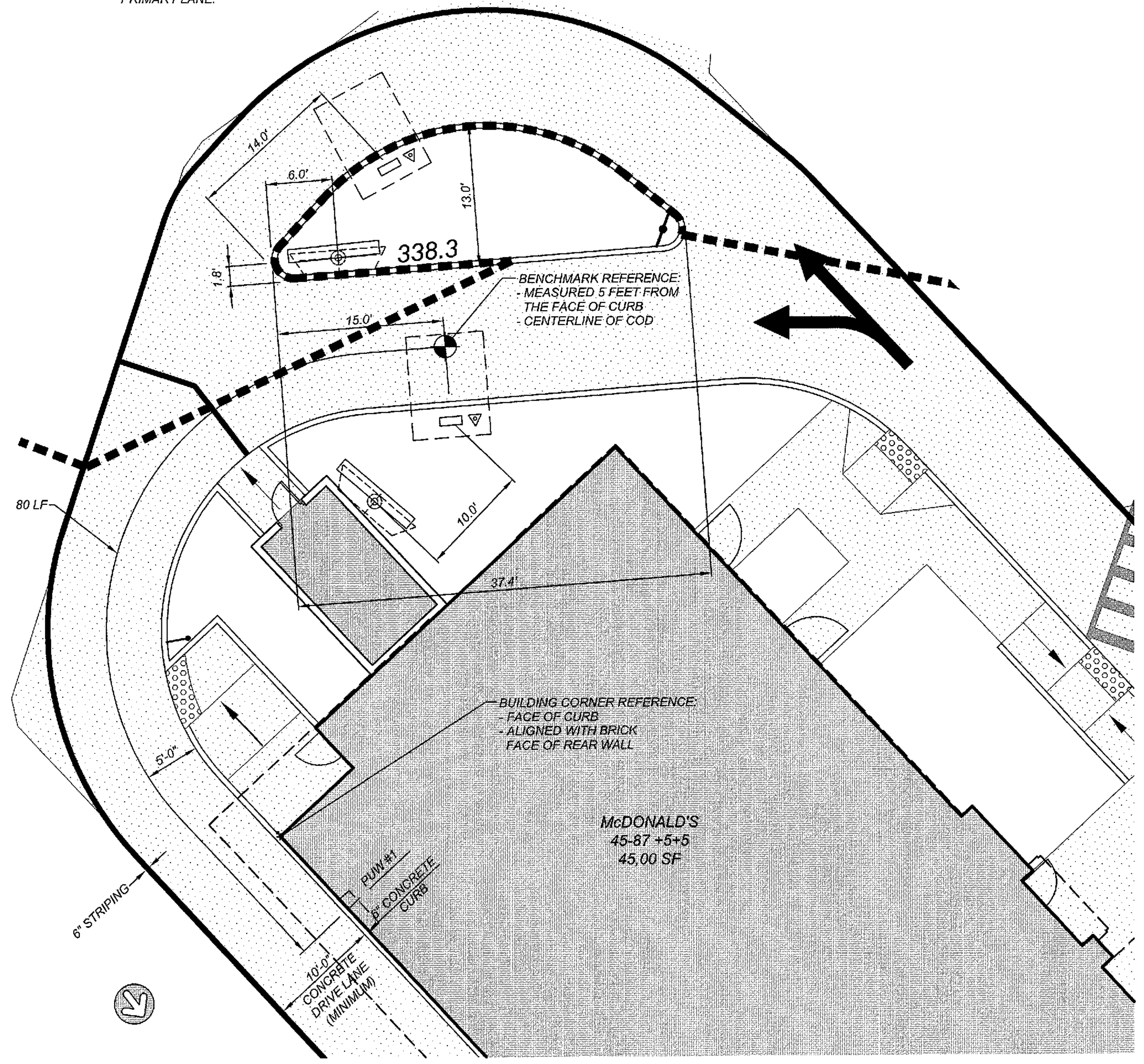

DRIVE-THRU PRIMARY LANE DIMENSIONING PLAN

SCALE: 1" = 10'

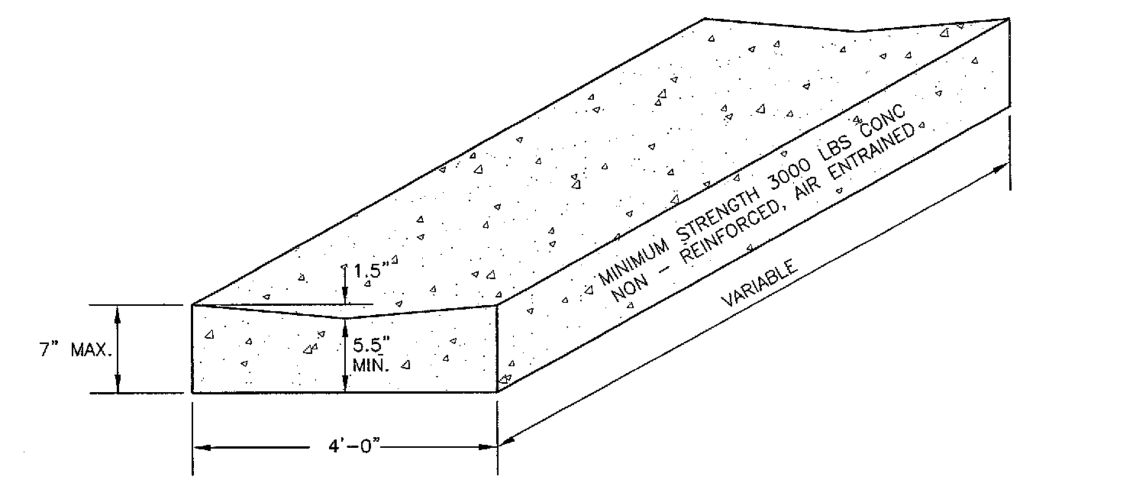

CONCRETE VALLEY GUTTER

NOTE:
2.00% MAXIMUM CROSS SLOPE

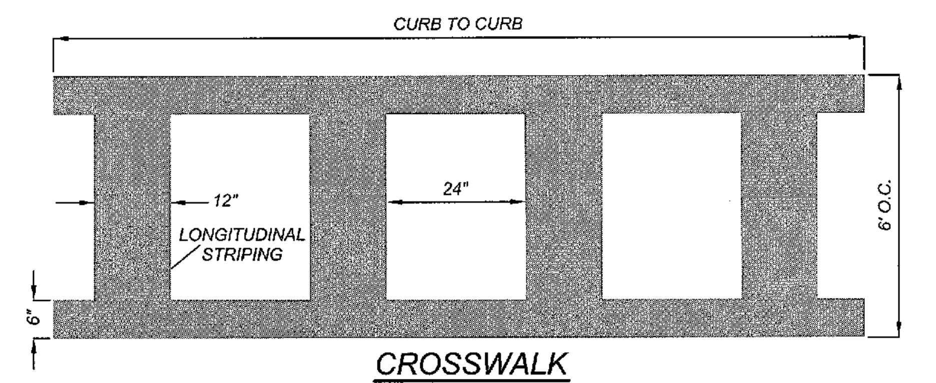

CROSSWALK

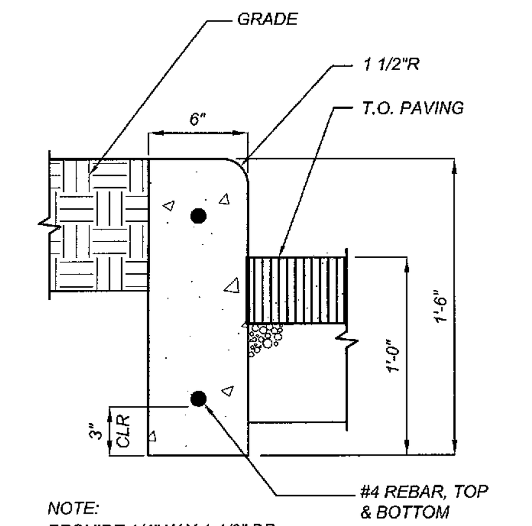

NOTE:
PROVIDE 1/4" W X 1-1/2" DP CONSTRUCTION JOINT 10'-0" O.C. MAX OR 5'-0" O.C. MIN.

HEADER CURB

(N.T.S.)

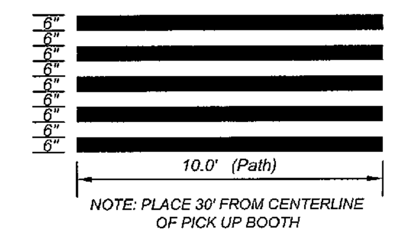

NOTE: PLACE 30' FROM CENTERLINE OF PICK UP BOOTH

GRILL STALL (TYPICAL)

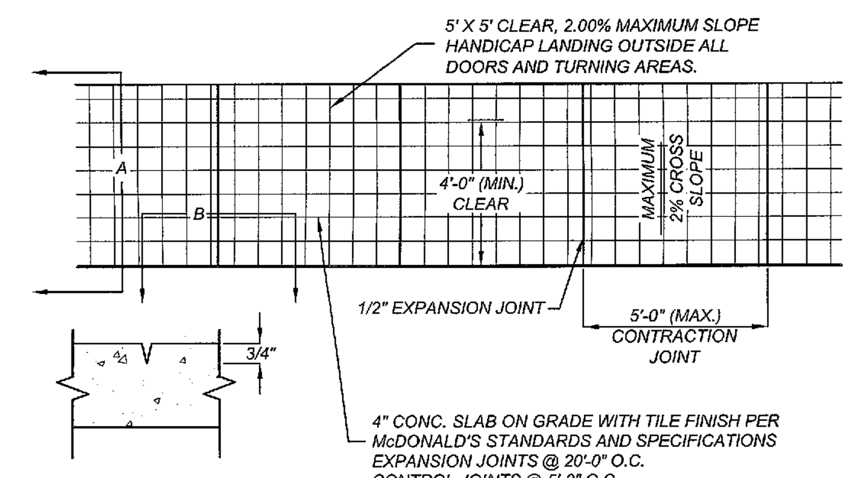

SECTION B-B
CONTRACTION JOINT

PLAN

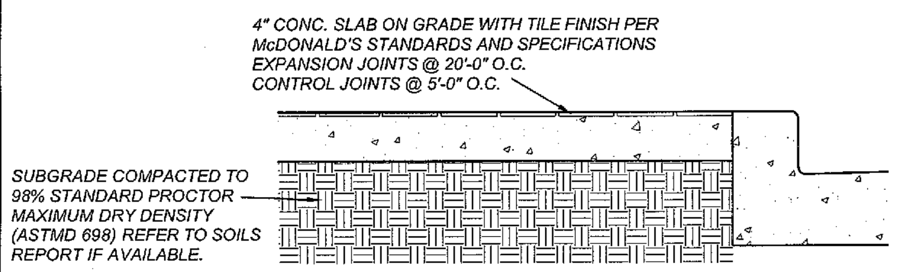

SECTION A-A

McDONALD'S TILE CONCRETE SIDEWALK

NOTE: MINIMUM FLOW RATE OF 100 SF PER GALLON (PAINT FEDERAL SPECIFICATION: TT-P-1952D).

McDONALD'S "THANK YOU"

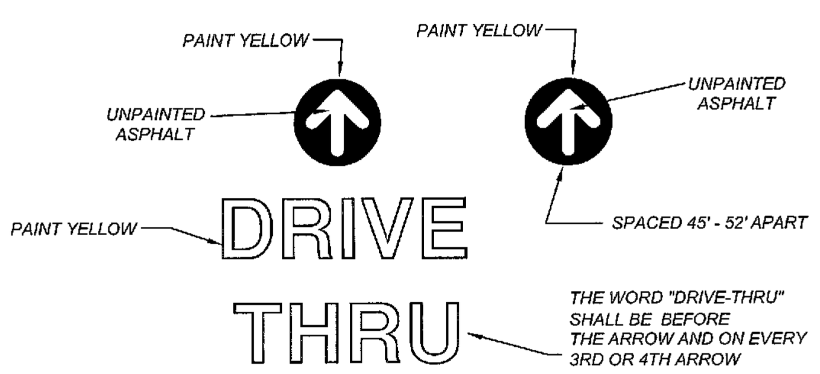

NOTE: MINIMUM FLOW RATE OF 100 SF PER GALLON (PAINT FEDERAL SPECIFICATION: TT-P-1952D).

McDONALD'S "DRIVE-THRU" DIRECTIONAL ARROW

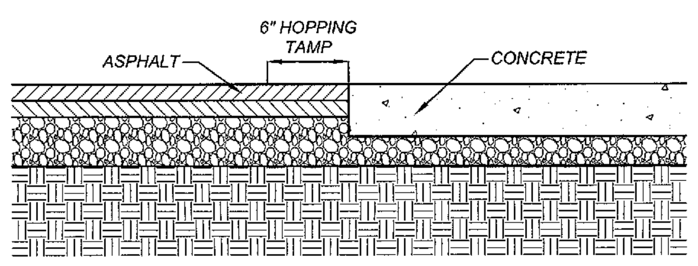

NOTE: CONTRACTOR SHALL USE HOPPING TAMP ADJACENT TO CONCRETE.

ASPHALT/CONCRETE TRANSITION

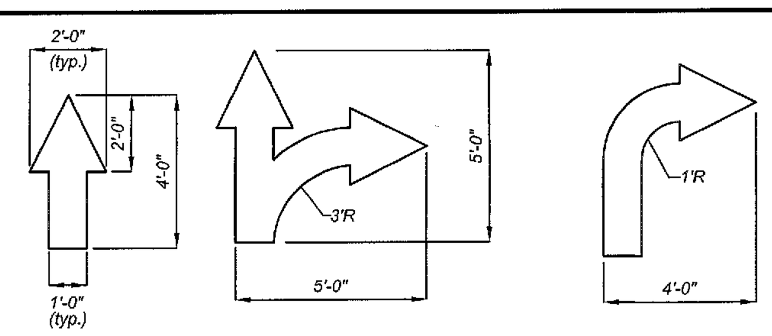

NOTES:
1. WHITE PAINT. MINIMUM FLOW RATE OF 100 SF PER GALLON (PAINT FEDERAL SPECIFICATION: TT-P-1952D).
2. 45" - 52" SPACING.
3. DO NOT REPLACE DRIVE-THRU ARROWS.

DIRECTIONAL ARROWS

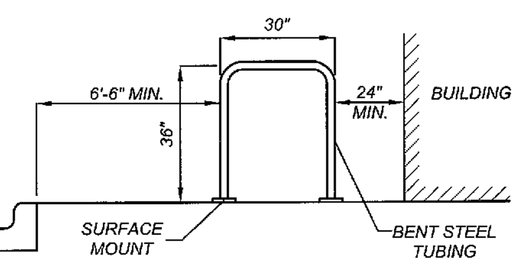

PROFILE

NOTE: TWO INVERTED "U" RACKS PLACED WITH THE BROAD SIDES PARALLEL TO EACH OTHER WILL ACCOMODATE 4 BICYCLES.

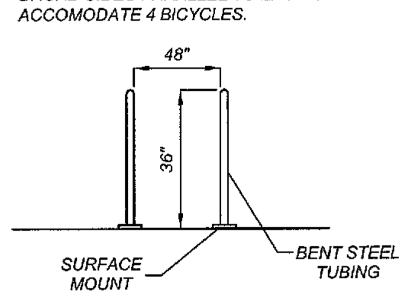

SECTION

BICYCLE RACK DETAIL

(n.t.s.)

PRELIMINARY DESIGN - NOT RELEASED FOR CONSTRUCTION

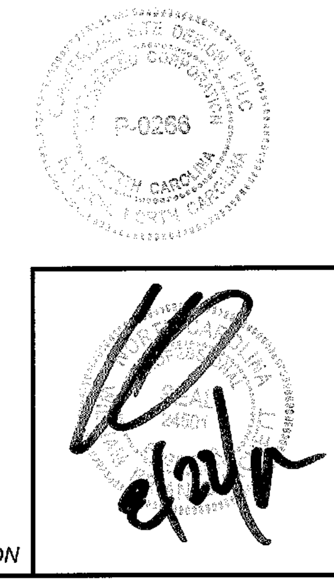

PLAN SCALE: NOT TO SCALE	
STREET ADDRESS 1010 NORTH MIAMI BOULEVARD	
CITY DURHAM	STATE NORTH CAROLINA
COUNTY DURHAM	
TAX PARCEL NUMBER 0831-12-86-7423	LOCATION CODE NUMBER 32-0135
CSD FILENAME: MCD0708-DT1	

REV	DATE	DESCRIPTION	BY	ISSUE/REF
1	04-05-11	PERMIT ISSUE	RCN	
2	07-27-11	REVISED PER DRB REVIEW #1	JCB	
3	11-28-11	REVISED PER DRB REVIEW #2	JWR	
4	02-15-12	MSPU REVIEW COMMENTS #1	JWR	
5	04-16-12	MSUP REVIEW COMMENTS #2 & DRB REVIEW #3	RCN	
6	06-20-12	REVERT TO ORIGINAL GRADING	RCN	
7	08-22-12	MSUP REVIEW COMMENTS #3	DHG	

COMMERCIAL SITE DESIGN
8312 CREEDMOOR ROAD
RALEIGH, NORTH CAROLINA 27613
(919) 848-6121, FAX: (919) 848-3741
WWW.CSITEDESIGN.COM

McDonald's®

THESE PLANS AND SPECIFICATIONS ARE THE PROPERTY OF McDONALD'S CORPORATION AND SHALL NOT BE REPRODUCED WITHOUT THEIR WRITTEN PERMISSION.

OFFICE	RALEIGH REGION
ADDRESS	4601 SIX FORKS ROAD - SUITE 200 - RALEIGH, N.C. 27609

PLAN APPROVAL

	SIGNATURE (2 REQUIRED)	DATE
REGIONAL MGR.		
REGIONAL DEV. DIRECTOR		
REGIONAL CONSTRUCTION MGR.		
REGIONAL REAL ESTATE MGR.		
CO-SIGN SIGNATURES		
AREA CONSTRUCTION MGR.		
CONTRACTOR		

STATUS	DATE	BY
FINAL	-	-
PLAN CHECKED	-	-
AS-BUILT	-	-

C-7
DETAILS

1. CONSTRUCT THE RAMP SURFACE TO BE STABLE, FIRM, AND SLIP RESISTANT. CONSTRUCT THE CURB RAMP TYPE AS SHOWN IN THE PAVEMENT MARKING PLANS OR AS DIRECTED BY THE ENGINEER.

2. LOCATE CURB RAMPS AND PLACE PEDESTRIAN CROSSWALK MARKINGS AS SHOWN IN THE PAVEMENT MARKING PLANS. WHEN FIELD ADJUSTMENTS REQUIRE MOVING CURB RAMPS OR MARKINGS AS SHOWN, CONTACT THE SIGNING AND DELINEATION UNIT OR LOCATE AS DIRECTED BY THE ENGINEER.

3. COORDINATE THE CURB RAMP AND THE PEDESTRIAN CROSSWALK MARKINGS SO A 4'x4' CLEAR SPACE AT THE BASE OF THE CURB RAMP WILL FALL WITHIN THE PEDESTRIAN CROSSWALK LINES.

4. SET BACK DISTANCE FROM INSIDE CROSSWALK MARKING TO NEAREST EDGE OF TRAVEL LANE IS 4' MINIMUM.

5. REFER TO THE PAVEMENT MARKING PLANS FOR STOP BAR LOCATIONS AT SIGNALIZED INTERSECTIONS. IF A PAVEMENT MARKING PLAN IS NOT PROVIDED, CONTACT THE SIGNAL DESIGN SECTION FOR THE STOP BAR LOCATIONS OR LOCATE AS DIRECTED BY THE ENGINEER.

6. TERMINATE PARKING A MINIMUM OF 20' BACK OF A PEDESTRIAN CROSSWALK.

7. CONSTRUCT CURB RAMPS A MINIMUM OF 4' WIDE.

8. CONSTRUCT THE RUNNING SLOPE OF THE RAMP 8.33% (1":12") MAXIMUM.

9. ALLOWABLE CROSS SLOPE ON SIDEWALKS AND CURB RAMPS WILL BE 2% (1":50") MAXIMUM.

10. CONSTRUCT THE SIDE FLARE SLOPE A MAXIMUM OF 10% (1":10") MEASURED ALONG THE CURB LINE.

11. CONSTRUCT THE COUNTER SLOPE OF THE GUTTER OR STREET AT THE BASE OF THE CURB RAMP A MAXIMUM OF 5% (1":20") AND MAINTAIN A SMOOTH TRANSITION.

12. CONSTRUCT LANDINGS FOR SIDEWALK A MINIMUM OF 4'x4' WITH A MAXIMUM SLOPE OF 2% (1":50") IN ANY DIRECTION. CONSTRUCT LANDINGS FOR MEDIAN ISLANDS A MINIMUM OF 5'x5' WITH A MAXIMUM SLOPE OF 2% (1":50") IN ANY DIRECTION.

13. TO USE A MEDIAN ISLAND AS A PEDESTRIAN REFUGE AREA, MEDIAN ISLANDS WILL BE A MINIMUM OF 6' WIDE. CONSTRUCT MEDIAN ISLANDS TO PROVIDE PASSAGE OVER OR THROUGHOUT THE ISLAND.

14. SMALL CHANNELIZATION ISLANDS THAT CAN NOT PROVIDE A 5'X5' LANDING AT THE TOP OF A RAMPS, WILL BE CUT THROUGH LEVEL WITH THE SURFACE STREET.

15. CURB RAMPS WITH RETURNED CURBS MAY BE USED ONLY WHERE PEDESTRIANS WOULD NOT NORMALLY WALK ACROSS THE RAMP. THE ADJACENT SURFACE IS PLANTING OR OTHER NON-WALKING SURFACE OR THE SIDE APPROACH IS SUBSTANTIALLY OBSTRUCTED.

16. PLACE A 1/2" EXPANSION JOINT WHERE THE CONCRETE CURB RAMP JOINS THE CURB AS SHOWN IN NCDOT ROADWAY STANDARD DRAWING 848.01

17. PLACE ALL PEDESTRIAN PUSH BUTTON ACTUATORS AND CROSSING SIGNALS AS SHOWN IN THE PLANS OR AS SHOWN IN THE MUTCD.

18. CURB RAMPS THROUGH MEDIAN ISLANDS, SINGLE RAMPS AT DUAL CROSSWALKS OR LIMITED R/W SITUATIONS, WILL BE HANDLED BY SPECIAL DETAILS.

Adopted from NCDOT Details 848.05 and 848.06

DURHAM 1869 CITY OF MEDICINE

DATE: February 3, 2012	Curb Ramp Notes	SCALE: NONE
	CITY OF DURHAM, NORTH CAROLINA DEPARTMENT OF PUBLIC WORKS	DETAIL NO. CC-1.0

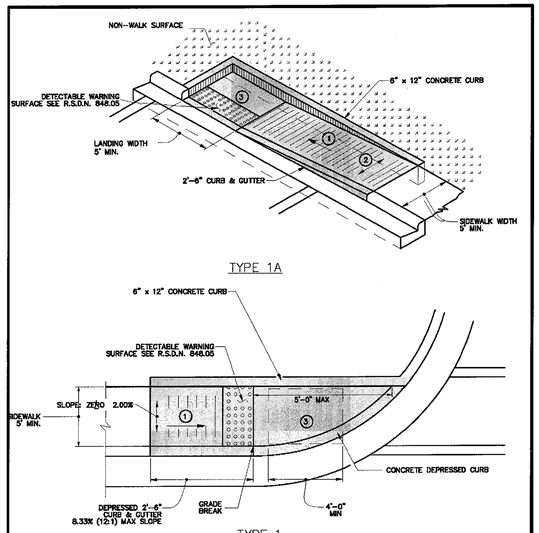

Adopted from NCDOT "Alternate Curb Ramp Details"

DURHAM 1869 CITY OF MEDICINE

DATE: February 3, 2012	Curb Ramps - Directional	SCALE: NONE
	CITY OF DURHAM, NORTH CAROLINA DEPARTMENT OF PUBLIC WORKS	DETAIL NO. CC-6.0

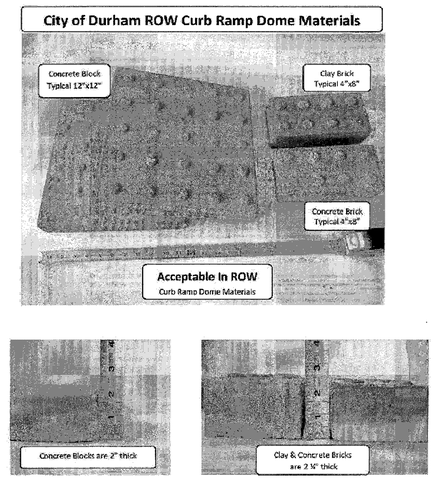

DURHAM 1869 CITY OF MEDICINE

DATE: February 3, 2012	Curb Ramps - Acceptable Materials in ROW	SCALE: NONE
	CITY OF DURHAM, NORTH CAROLINA DEPARTMENT OF PUBLIC WORKS	DETAIL NO. CC-11.0

REV	DATE	DESCRIPTION	BY	ISSUE/REF
1	04-05-11	PERMIT ISSUE	RCN	
2	07-27-11	REVISED PER DRB REVIEW #1	JCB	
3	11-28-11	REVISED PER DRB REVIEW #2	JWR	
4	02-15-12	MSPU REVIEW COMMENTS #1	JWR	
5	04-16-12	MSUP REVIEW COMMENTS #2 & DRB REVIEW #3	RCN	
6	06-20-12	REVERT TO ORIGINAL GRADING	RCN	

COMMERCIAL SITE DESIGN
8312 CREEDMOOR ROAD
RALEIGH, NORTH CAROLINA 27613
(919) 848-6021, FAX: (919) 848-3741
WWW.CSITEDESIGN.COM

McDonald's®
THESE PLANS AND SPECIFICATIONS ARE THE PROPERTY OF MCDONALD'S CORPORATION AND SHALL NOT BE REPRODUCED WITHOUT THEIR WRITTEN PERMISSION.

RALEIGH REGION
4601 SIX FORKS ROAD - SUITE 200 - RALEIGH, N.C. 27609

OFFICE
ADDRESS

PLAN APPROVAL

	SIGNATURE (2 REQUIRED)	DATE
REGIONAL MGR.		
REGIONAL DEV. DIRECTOR		
REGIONAL CONSTRUCTION MGR.		
REGIONAL REAL ESTATE MGR.		
CO-SIGN SIGNATURES		
AREA CONSTRUCTION MGR.		
CONTRACTOR		

PRELIMINARY DESIGN - NOT RELEASED FOR CONSTRUCTION

PLAN SCALE: NOT TO SCALE

STREET ADDRESS: 1010 NORTH MIAMI BOULEVARD

CITY	STATE
DURHAM	NORTH CAROLINA

COUNTY: DURHAM

TAX PARCEL NUMBER	LOCATION CODE NUMBER
0831-12-86-7423	32-0135
CSD FILENAME: MCD0708-DT1A	

STATUS	DATE	BY
FINAL	-	-
PLAN CHECKED	-	-
AS-BUILT	-	-

C-8
DETAILS

X:\MCD - McDonalds\0700 Sites\0709 - Durham, NC @ Wellons Village 32-0135\CADM\CD0708-DT1A.dwg, 7/11/2012 3:35:52 PM, chrisn

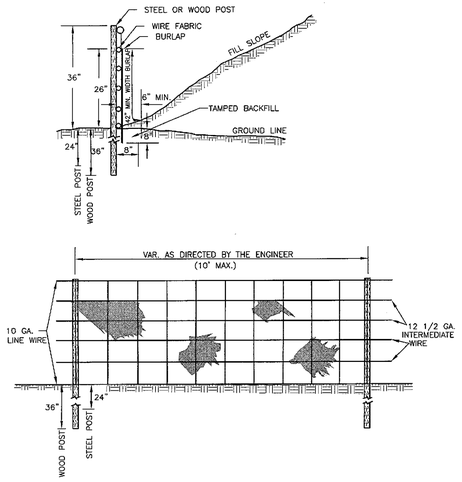

NOTES:
(1) FENCE FABRIC SHALL BE A MINIMUM OF 32 INCHES IN WIDTH AND SHALL HAVE A MINIMUM OF 6 LINE WIRES WITH 12" STAY SPACING.
(2) BURLAP SHALL BE 7–1/2 OZ. WEIGHT AND A MINIMUM OF 32" IN WIDTH. BURLAP SHALL BE FASTENED ADEQUATELY TO THE FABRICS AS DIRECTED BY THE ENGINEER.
(3) STEEL POSTS SHALL BE 5'0" IN HEIGHT AND BE OF THE SELF–FASTENER ANGLE STEEL TYPE.
(4) WOOD POST SHALL BE 5 TO 6 FEET IN HEIGHT AND 3 TO 4 INCHES IN DIAMETER. WIRE FABRIC SHALL BE FASTENED TO WOODEN NOT LESS THEN #9 WIRE STAPLES 1–1/2" LONG.

DETAIL OF TEMPORARY SILT FENCE

S1-11-90.DWG

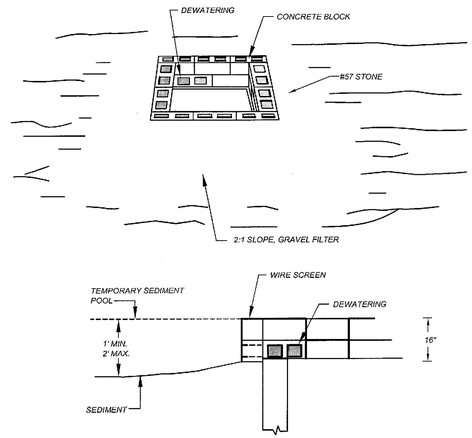

CONSTRUCTION SPECIFICATIONS

1. LAY ONE BLOCK ON EACH SIDE OF THE STRUCTURE ON ITS SIDE IN THE BOTTOM ROW TO ALLOW POOL DRAINAGE. THE FOUNDATION SHOULD BE EXCAVATED AT LEAST 2 INCHES BELOW THE CREST OF THE STORM DRAIN. PLACE THE BOTTOM ROW OF BLOCKS AGAINST THE EDGE OF THE STORM DRAIN FOR LATERAL SUPPORT AND TO AVOID WASHOUTS WHEN OVERFLOW OCCURS. IF NEEDED, GIVE LATERAL SUPPORT TO SUBSEQUENT ROWS BY PLACING 2 X 4 WOOD STUDS THROUGH BLOCK OPENINGS.
2. CAREFULLY FIT HARDWARE CLOTH OR COMPARABLE WIRE MESH WITH 1/2-INCH OPENINGS OVER ALL BLOCK OPENINGS TO HOLD GRAVEL IN PLACE.
3. USE CLEAN GRAVEL, 3/4- TO 1/2-INCH IN DIAMETER, PLACED 2 INCHES BELOW THE TOP OF THE BLOCK ON A 2:1 SLOPE OR FLATTER AND SMOOTH IT TO AN EVEN GRADE. DOT #57 WASHED STONE IS RECOMMENDED.

BLOCK AND GRAVEL DROP INLET PROTECTION

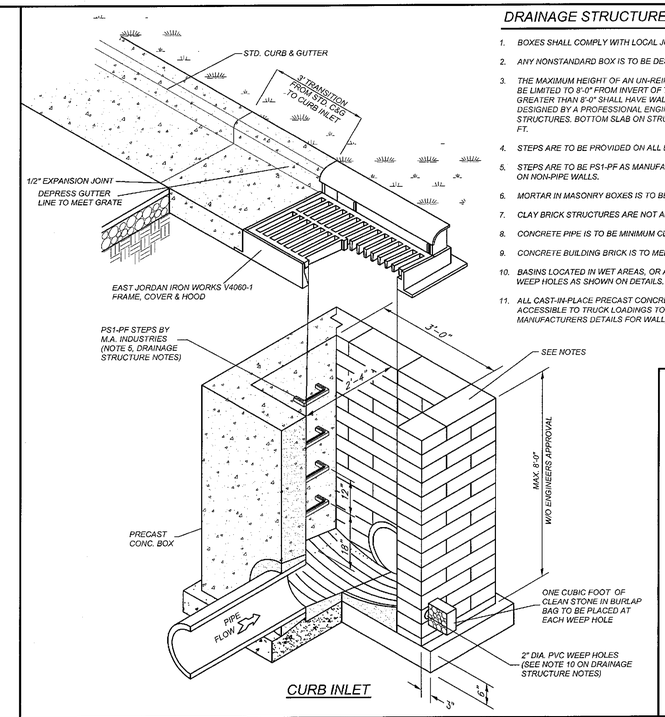

CURB INLET

DRAINAGE STRUCTURE NOTES

1. BOXES SHALL COMPLY WITH LOCAL JURISDICTIONAL STANDARDS AND SPECIFICATIONS.
2. ANY NONSTANDARD BOX IS TO BE DESIGNED BY A PROFESSIONAL ENGINEER.
3. THE MAXIMUM HEIGHT OF AN UN-REINFORCED MASONRY DRAINAGE STRUCTURE WITH 8" WALLS SHALL BE LIMITED TO 8'-0" FROM INVERT OF THE OUTLET PIPE TO THE TOP OF THE CASTING. DEPTHS GREATER THAN 8'-0" SHALL HAVE WALLS 12" THICK. BASINS OVER 12' IN TOTAL DEPTH SHALL BE DESIGNED BY A PROFESSIONAL ENGINEER. FOUR INCH WALLS ARE NOT ALLOWED ON DRAINAGE STRUCTURES. BOTTOM SLAB ON STRUCTURES SHALL BE REINFORCED WHEN BOX DEPTHS EXCEEDS 8 FT.
4. STEPS ARE TO BE PROVIDED ON ALL BASINS DEEPER THAN 42".
5. STEPS ARE TO BE PS1-PF AS MANUFACTURED BY M.A. INDUSTRIES OR AN APPROVED EQUAL. LOCATE ON NON-PIPE WALLS.
6. MORTAR IN MASONRY BOXES IS TO BE TYPE M.
7. CLAY BRICK STRUCTURES ARE NOT ALLOWED.
8. CONCRETE PIPE IS TO BE MINIMUM CLASS III.
9. CONCRETE BUILDING BRICK IS TO MEET ASTM C-55, GRADE N, TYPE 1.
10. BASINS LOCATED IN WET AREAS, OR AS OTHERWISE REQUIRED BY THE TOWN ENGINEER, SHALL HAVE WEEP HOLES AS SHOWN ON DETAILS.
11. ALL CAST-IN-PLACE PRECAST CONCRETE DRAINAGE STRUCTURES LOCATED IN PAVED AREAS ACCESSIBLE TO TRUCK LOADINGS TO BE DESIGNED TO MEET AASHTO HS 20-44 LOADING. SEE MANUFACTURERS DETAILS FOR WALL, TOP AND BOTTOM THICKNESS.

REV	DATE	DESCRIPTION	BY	ISSUE/REF
1	04-05-11	PERMIT ISSUE	RCN	
2	07-27-11	REVISED PER DRB REVIEW #1	JCB	
3	11-28-11	REVISED PER DRB REVIEW #2	JWR	
4	02-15-12	MSPU REVIEW COMMENTS #1	JWR	
5	04-16-12	MSUP REVIEW COMMENTS #2 & DRB REVIEW #3	RCN	
6	06-20-12	REVERT TO ORIGINAL GRADING	RCN	

COMMERCIAL SITE DESIGN
8312 LREDMOOR ROAD
RALEIGH, NORTH CAROLINA 27613
(919) 848-4021, FAX: (919) 848-3741
WWW.CSITEDESIGN.COM

McDonald's®
THESE PLANS AND SPECIFICATIONS ARE THE PROPERTY OF McDONALD'S CORPORATION AND SHALL NOT BE REPRODUCED WITHOUT THEIR WRITTEN PERMISSION.

OFFICE: RALEIGH REGION
ADDRESS: 4601 SIX FORKS ROAD - SUITE 200 - RALEIGH, N.C. 27609

PLAN APPROVAL

	SIGNATURE (2 REQUIRED)	DATE
REGIONAL MGR.		
REGIONAL DEV. DIRECTOR		
REGIONAL CONSTRUCTION MGR.		
REGIONAL REAL ESTATE MGR.		
CO-SIGN SIGNATURES		
AREA CONSTRUCTION MGR.		
CONTRACTOR		

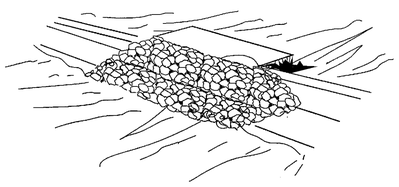

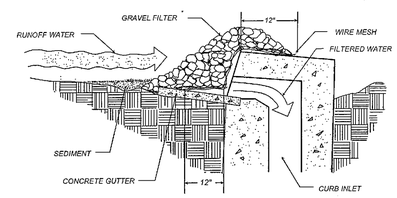

SPECIFIC APPLICATION

THIS METHOD OF INLET PROTECTION IS APPLICABLE AT CURB INLETS WHERE PONDING IN FRONT OF THE STRUCTURE IS NOT LIKELY TO CAUSE INCONVENIENCE OR DAMAGE TO ADJACENT STRUCTURES AND UNPROTECTED AREAS.

* GRAVEL SHALL BE #57 WASHED STONE

INTERMEDIATE BLOCK & GRAVEL DROP INLET PROTECTION

NOTES:
1. PUT SILT FENCE OR TREE PROTECTION FENCE UP TO ENSURE CONSTRUCTION ENTRANCE IS USED.
2. IF CONSTRUCTION ON THE SITES ARE SUCH THAT THE MUD IS NOT REMOVED BY THE VEHICLE TRAVELING OVER THE STONE, THEN THE TIRES OF THE VEHICLES MUST BE WASHED BEFORE ENTERING THE PUBLIC ROAD.

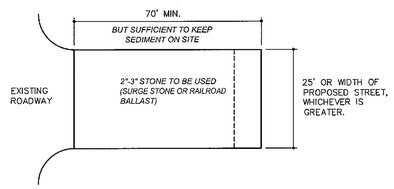

PLAN

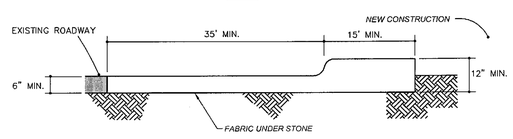

CROSS SECTION

CONSTRUCTION ENTRANCE

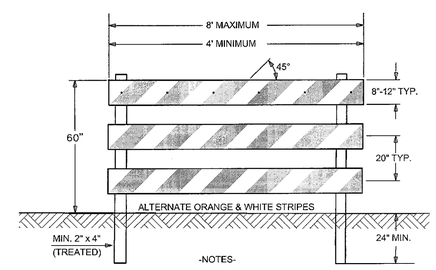

-NOTES-
1. STRIPES ON BARRICADE RAILS SLOPE AT AN ANGLE OF 45 DEGREES IN THE DIRECTION TRAFFIC IS TO PASS.
2. BARRICADE RAIL STRIPE SHALL BE 6 INCHES.
3. THE SIDES OF THE BARRICADE FACING TRAFFIC SHALL HAVE RETROREFLECTIVE RAIL FACES.

STANDARD TEMPORARY BARRICADE

(NOT TO SCALE)

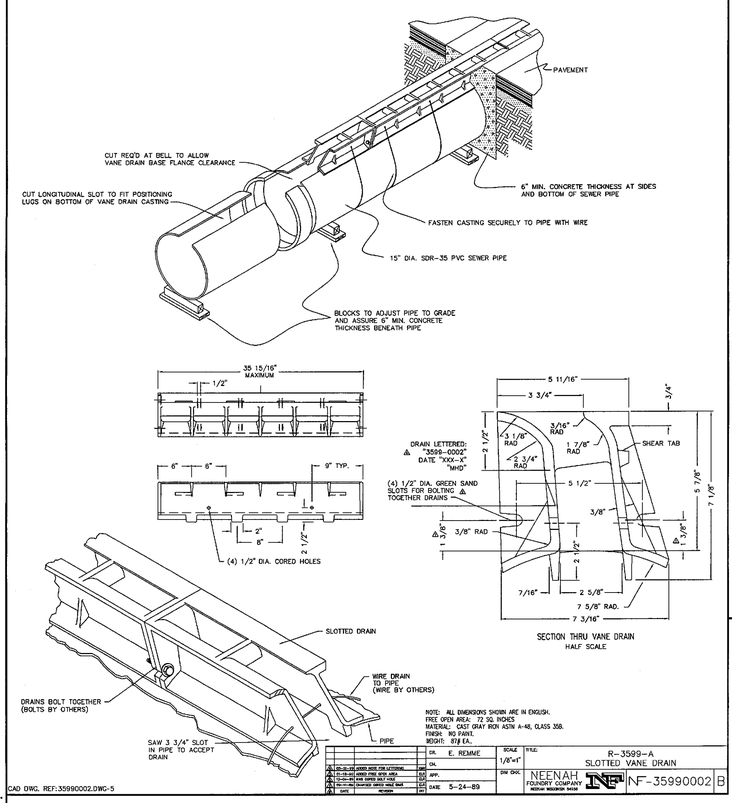

NOTE: ALL DIMENSIONS SHOWN ARE IN ENGLISH.
FREE OPEN AREA: 72 SQ. INCHES
MATERIAL: CAST GRAY IRON ASTM A-48, CLASS 35B.
FINISH: NO PAINT.
WEIGHT: 87# EA.

		DR. E. REMME	SCALE 1/8"=1'	TITLE: R-3599-A SLOTTED VANE DRAIN	
3	05-31-89 ADDED NOTE FOR LETTERING	CH.			
2	05-25-89 ADD SHEAR TAB	APP.	DW CHK.	NEENAH FOUNDRY COMPANY NEENAH WISCONSIN 54956	NF-35990002 B
1	05-11-89 ADD SLOTS FOR BOLTS				
0	05-11-89 REVISED SHEET WIDTH	DATE 5-24-89			
REV	DATE	REVISION			

CAD DWG. REF: 35990002.DWG-5

PRELIMINARY DESIGN - NOT RELEASED FOR CONSTRUCTION

PLAN SCALE: NOT TO SCALE	
STREET ADDRESS: 1010 NORTH MIAMI BOULEVARD	
CITY: DURHAM	STATE: NORTH CAROLINA
COUNTY: DURHAM	
TAX PARCEL NUMBER: 0831-12-86-7423	LOCATION CODE NUMBER: 32-0135
CSD FILENAME: MCD0708-DT2	

STATUS	DATE	BY
FINAL	-	-
PLAN CHECKED	-	-
AS-BUILT	-	-

C-9
DETAILS

X:\MCD - McDonalds\0700 Sites\0708 - Durham, NC @ Wellons Village 32-0135\CADM\C20708-DT2.dwg, 6/21/2012 9:59:27 AM, chrisn

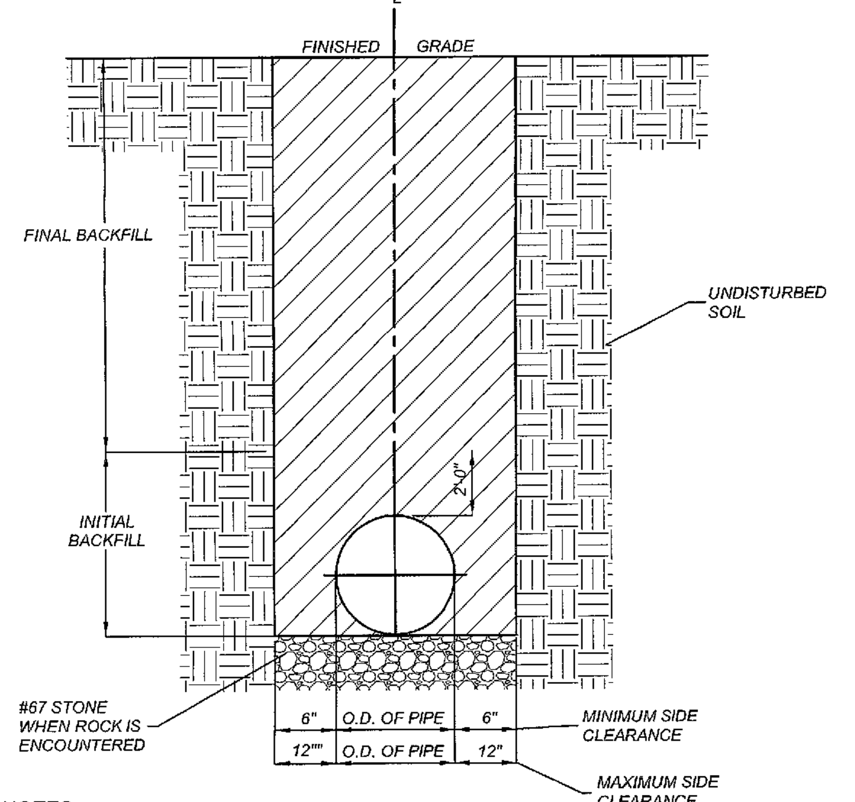

NOTES:

1. TRENCHES REQUIRING SHORING AND BRACING, DIMENSIONS SHALL BE TAKEN FROM THE INSIDE FACE OF THE SHORING AND BRACING.
2. NO ROCKS OR BOULDERS 4" OR LARGER TO BE USED IN INITIAL BACKFILL.
3. ALL BACKFILL MATERIAL SHALL BE SUITABLE NATIVE MATERIAL.
4. BACKFILL SHALL BE TAMPED IN 6" LIFTS IN TRAFFIC AREAS, 12" IN NON-TRAFFIC AREAS.
5. ACHIEVE 80% COMPACTION IN NON-TRAFFIC AREAS, AND 95% COMPACTION IN TRAFFIC AREAS.
6. IF IN EASEMENT 4" TOPSOIL, AND 12" CLEAN SELECT FILL IS REQUIRED.
7. NO BOULDERS 8" IN DIAMTER OR GREATER ALLOWED.

TRENCH BOTTOM DIMENSIONS & BACKFILLING REQUIREMENTS FOR DUCTILE IRON AND REINFORCED CONCRETE PIPE

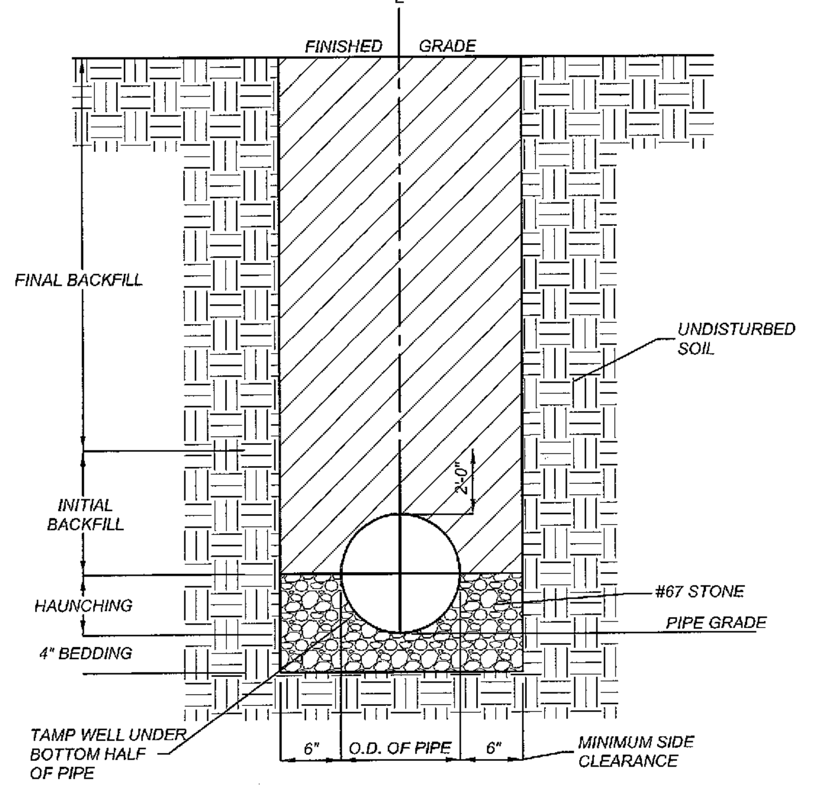

TYPICAL TRENCH BOTTOM DIMENSIONS FOR SDR 35 PVC GRAVITY PIPE

1. FOR TRENCHES REQUIRING SHORING AND BRACING, DIMENSIONS SHALL BE TAKEN FROM THE FACE OF THE SHORING AND BRACING.
2. NO ROCKS OR BOULDERS 4" OR LARGER TO BE USED IN INITIAL BACKFILL.
3. ALL BACKFILL MATERIAL SHALL BE SUITABLE NATIVE MATERIAL.
4. BACKFILL SHALL BE TAMPED IN 6" LIFTS IN TRAFFIC AREAS, 12" IN NON-TRAFFIC AREAS.

TRENCH BOTTOM DIMENSIONS & BACKFILLING REQUIREMENTS FOR PVC GRAVITY SEWER MAIN

TRENCH DETAILS

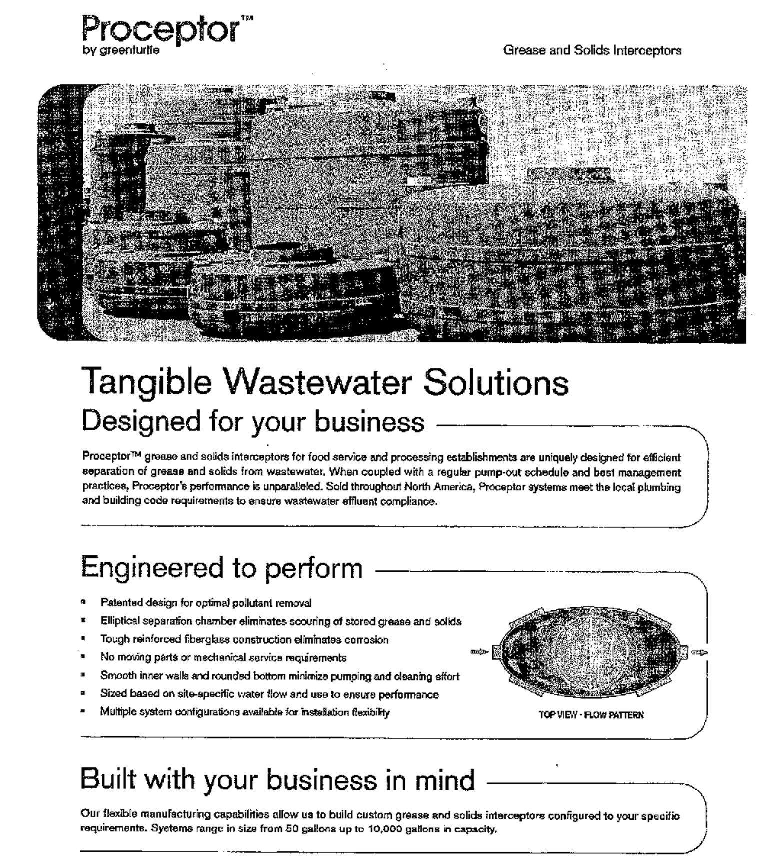

Tangible Wastewater Solutions

Designed for your business

Proceptor™ grease and solids interceptors for food service and processing establishments are uniquely designed for efficient separation of grease and solids from wastewater. When coupled with a regular pump-out schedule and best management practices, Proceptor's performance is unparalleled. Sold throughout North America, Proceptor systems meet the local plumbing and building code requirements to ensure wastewater effluent compliance.

Engineered to perform

- Patented design for optimal pollutant removal
- Elliptical separation chamber eliminates scouring of stored grease and solids
- Tough reinforced fiberglass construction eliminates corrosion
- No moving parts or mechanical service requirements
- Smooth inner walls and rounded bottom minimize pumping and cleaning effort
- Sized based on site-specific water flow and use to ensure performance
- Multiple system configurations available for installation flexibility

Built with your business in mind

Our flexible manufacturing capabilities allow us to build custom grease and solids interceptors configured to your specific requirements. Systems range in size from 50 gallons up to 10,000 gallons in capacity.

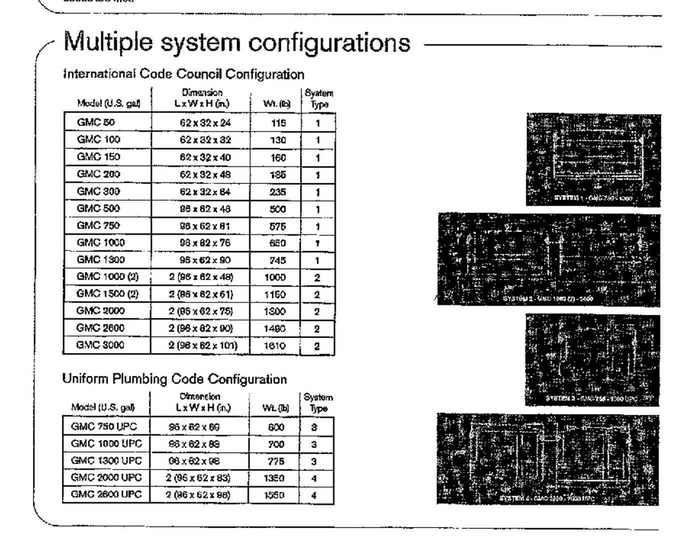

Our line of Proceptor interceptors are engineered and built specificaly for effective removal of grease and solids from wastewater. Our experienced team can configure the right solution for your site to ensure local wastewater effluent regulations and plumbing codes are met.

Multiple system configurations

International Code Council Configuration

Model (U.S. gal)	Dimension L x W x H (in.)	Wt. (lb)	System Type
GMC 50	62 x 32 x 24	115	1
GMC 100	62 x 32 x 32	130	1
GMC 150	62 x 32 x 40	160	1
GMC 200	62 x 32 x 48	185	1
GMC 300	62 x 32 x 64	235	1
GMC 500	96 x 62 x 48	500	1
GMC 750	96 x 62 x 61	575	1
GMC 1000	96 x 62 x 76	650	1
GMC 1300	96 x 62 x 90	745	1
GMC 1000 (2)	2 (96 x 62 x 48)	1000	2
GMC 1500 (2)	2 (96 x 62 x 61)	1150	2
GMC 2000	2 (96 x 62 x 76)	1300	2
GMC 2600	2 (96 x 62 x 90)	1490	2
GMC 3000	2 (96 x 62 x 101)	1610	2

Uniform Plumbing Code Configuration

Model (U.S. gal)	Dimension L x W x H (in.)	Wt. (lb)	System Type
GMC 750 UPC	96 x 62 x 69	600	3
GMC 1000 UPC	96 x 62 x 83	700	3
GMC 1300 UPC	96 x 62 x 98	775	3
GMC 2000 UPC	2 (96 x 62 x 83)	1350	4
GMC 2600 UPC	2 (96 x 62 x 98)	1550	4

Effective solutions ensure compliance

Green Turtle™ is a leading North American provider of wastewater pre-treatment solutions for commercial, institutional and industrial applications. Our technology and expertise help customers meet sanitary sewer regulations while protecting the watershed, public health and communities.

30-year warranty

Green Turtle offers a 30-year warranty against corrosion, leaks and structural failure as a standard feature with every Proceptor interceptor. Contact Green Turtle today to learn more about tangible wastewater solutions to meet your needs.

greenturtle

Green Turtle Americas Ltd.
201 South Tryon Street, Suite 1475, Charlotte, NC 28202
T 704 295 1733 T 877 428 8187 F 704 295 1734
www.greenturtletech.com

A Mantaco Company

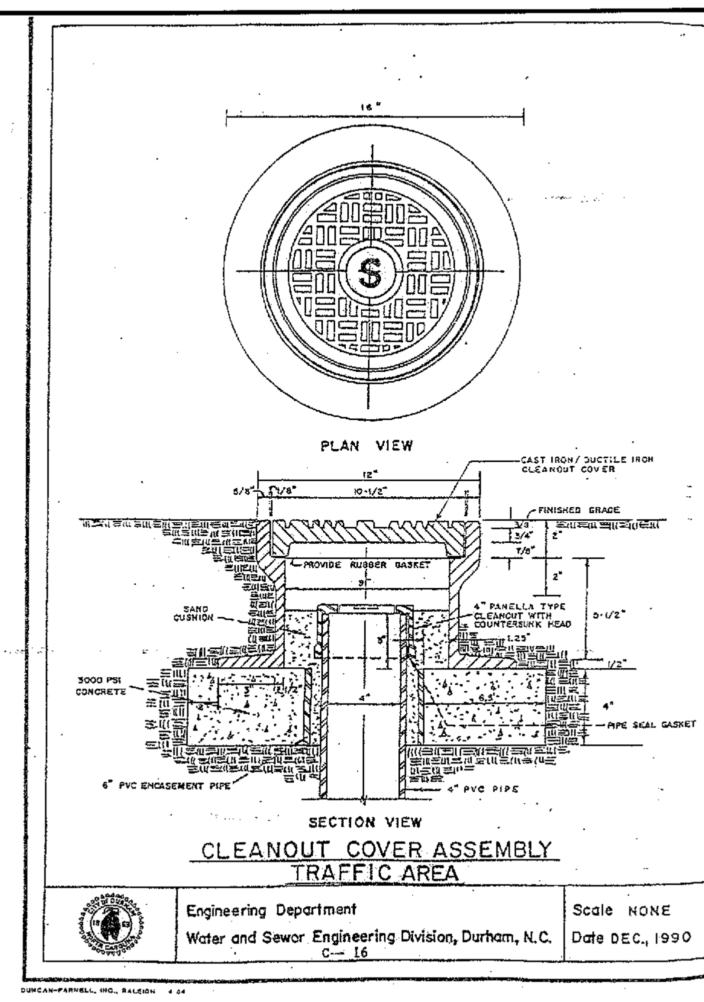

CLEANOUT COVER ASSEMBLY TRAFFIC AREA

Engineering Department | Scale NONE
Water and Sewer Engineering Division, Durham, N.C. | Date DEC., 1990
C-16

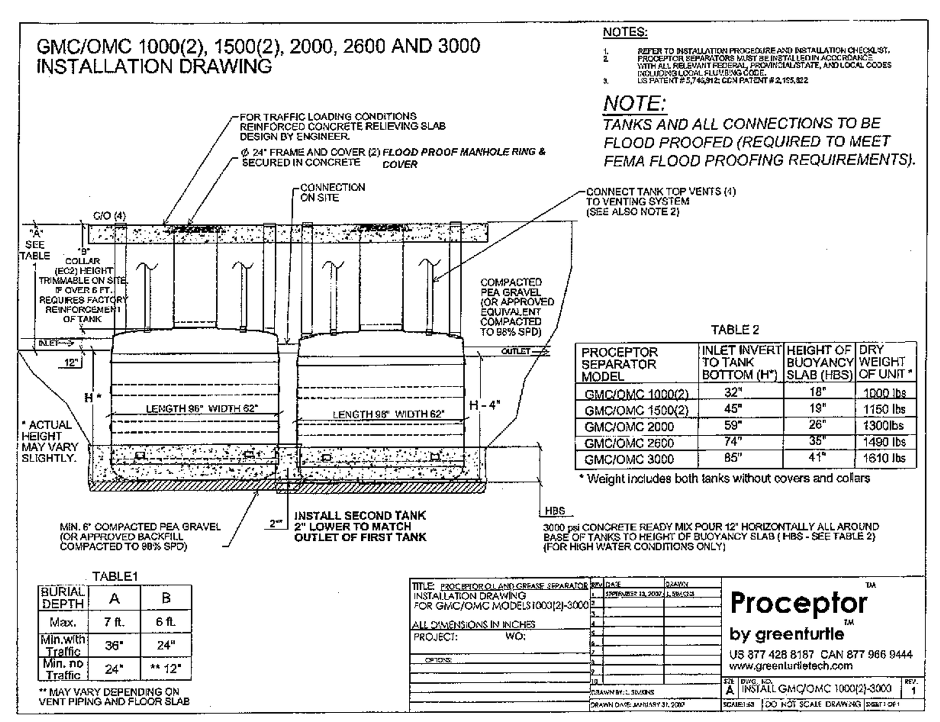

NOTE:
TANKS AND ALL CONNECTIONS TO BE FLOOD PROOFED (REQUIRED TO MEET FEMA FLOOD PROOFING REQUIREMENTS).

TABLE 2

PROCEPTOR SEPARATOR MODEL	INLET INVERT TO TANK BOTTOM (H*)	HEIGHT OF BUOYANCY SLAB (HBS)	DRY WEIGHT OF UNIT *
GMC/OMC 1000(2)	32"	18"	1000 lbs
GMC/OMC 1500(2)	45"	19"	1150 lbs
GMC/OMC 2000	59"	26"	1300lbs
GMC/OMC 2600	74"	35"	1490 lbs
GMC/OMC 3000	85"	41"	1610 lbs

* Weight includes both tanks without covers and collars

TABLE1

BURIAL DEPTH	A	B
Max.	7 ft.	6 ft.
Min. with Traffic	36"	24"
Min. no Traffic	24"	** 12"

** MAY VARY DEPENDING ON VENT PIPING AND FLOOR SLAB

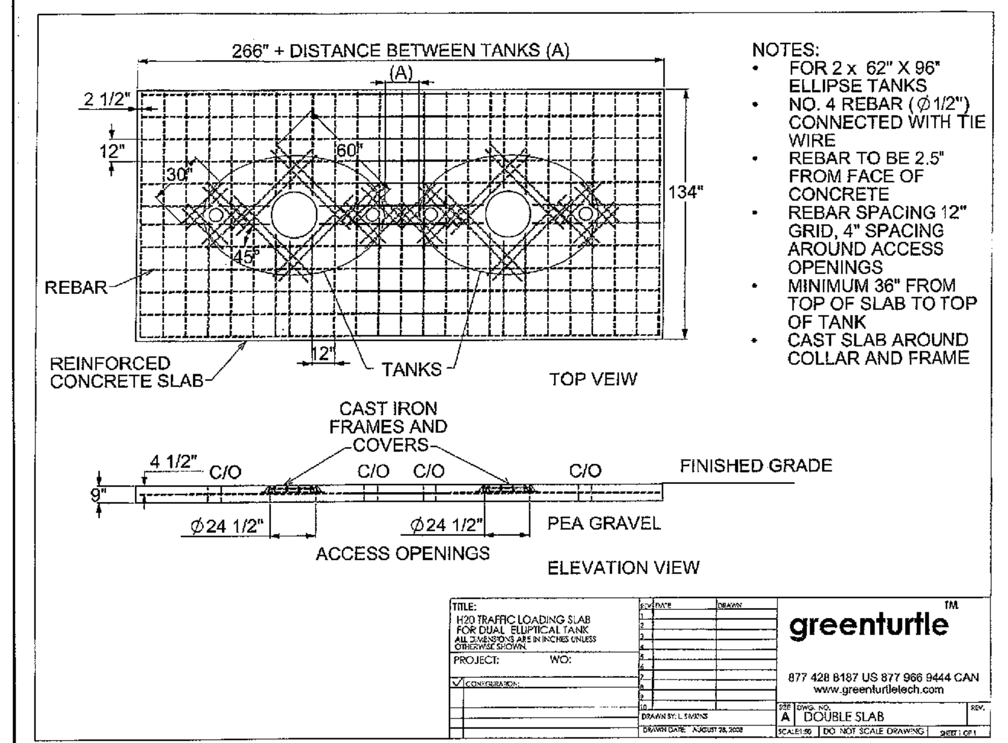

NOTES:
- FOR 2 x 62" X 96" ELLIPSE TANKS
- NO. 4 REBAR (Ø 1/2") CONNECTED WITH TIE WIRE
- REBAR TO BE 2.5" FROM FACE OF CONCRETE
- REBAR SPACING 12" GRID, 4" SPACING AROUND ACCESS OPENINGS
- MINIMUM 36" FROM TOP OF SLAB TO TOP OF TANK
- CAST SLAB AROUND COLLAR AND FRAME

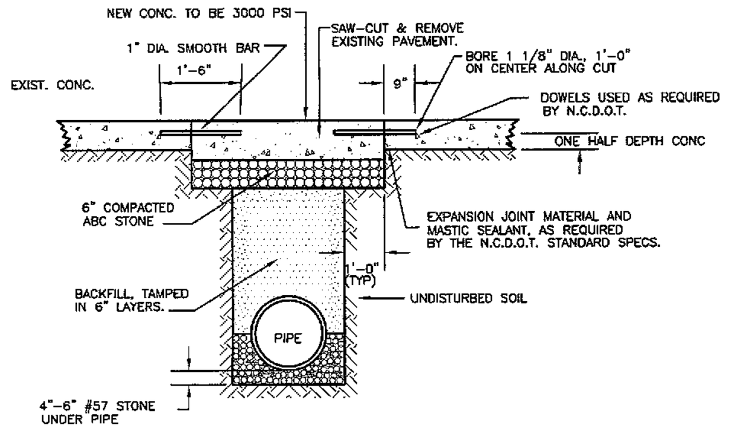

CONCRETE PAVEMENT PATCH

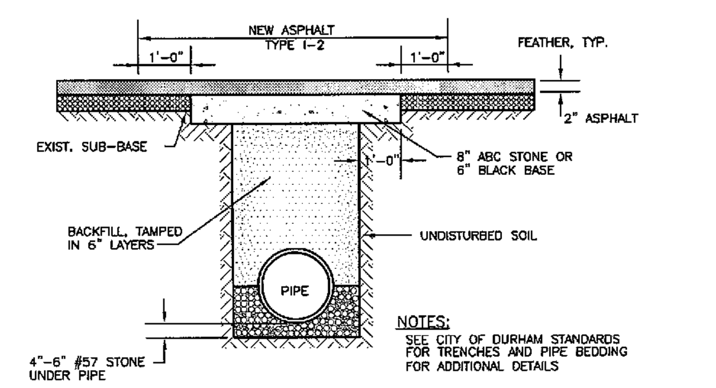

NOTES:
SEE CITY OF DURHAM STANDARDS FOR TRENCHES AND PIPE BEDDING FOR ADDITIONAL DETAILS

ASPHALT PAVEMENT PATCH

46-12-90.DWG

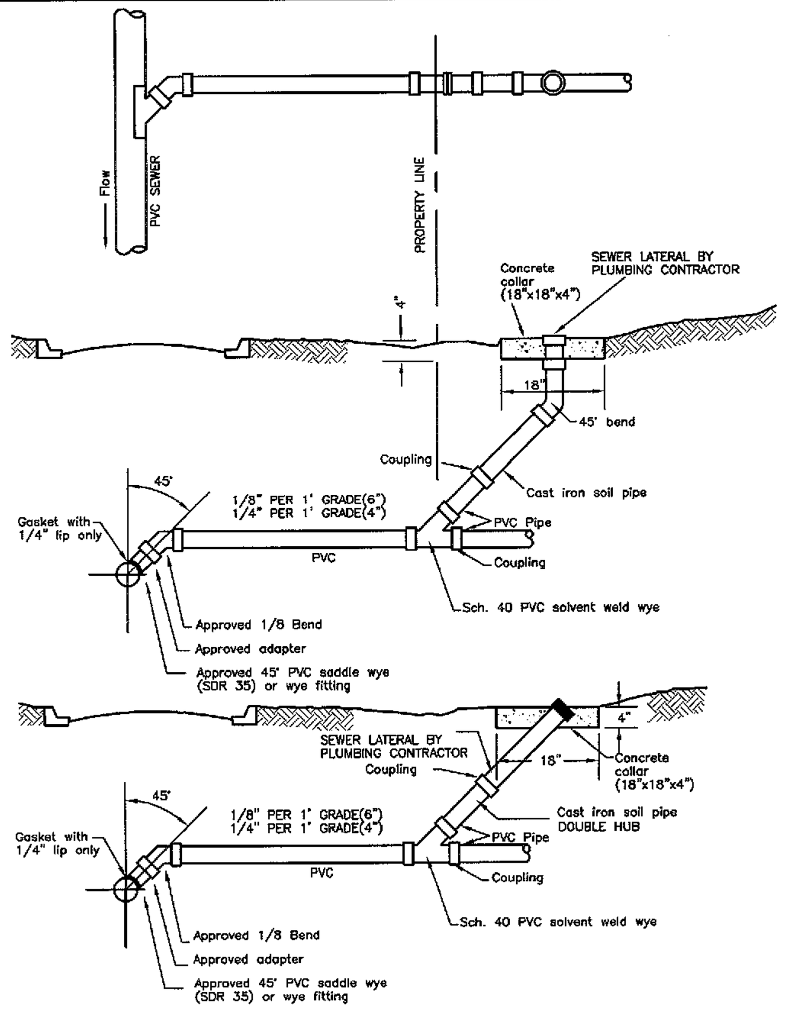

STANDARD COMPLETE SEWER LATERAL
(PVC SEWER MAIN)
140a-90.DWG

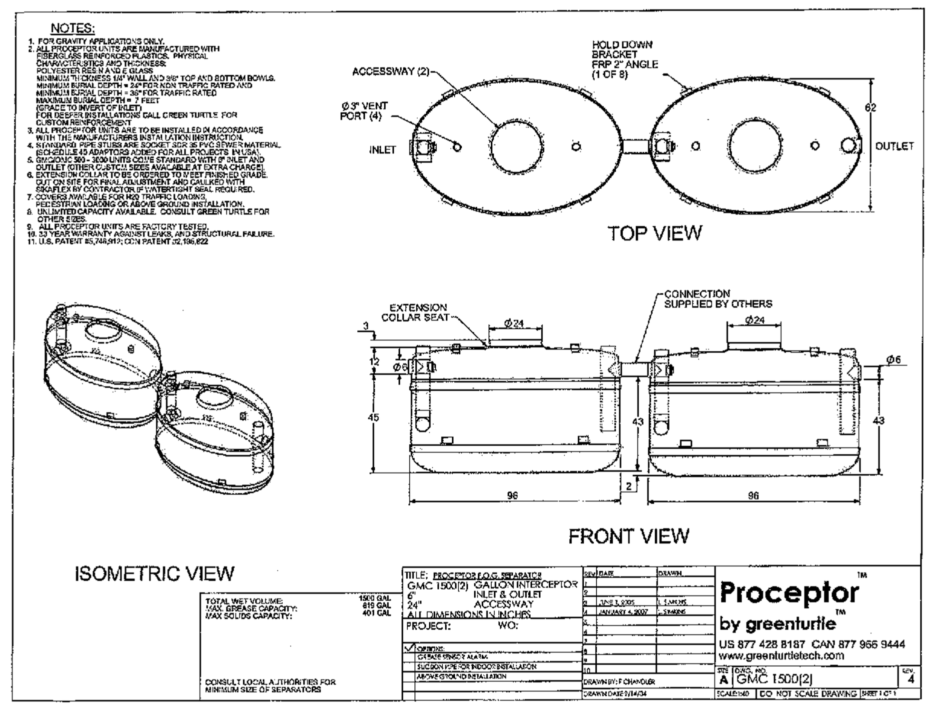

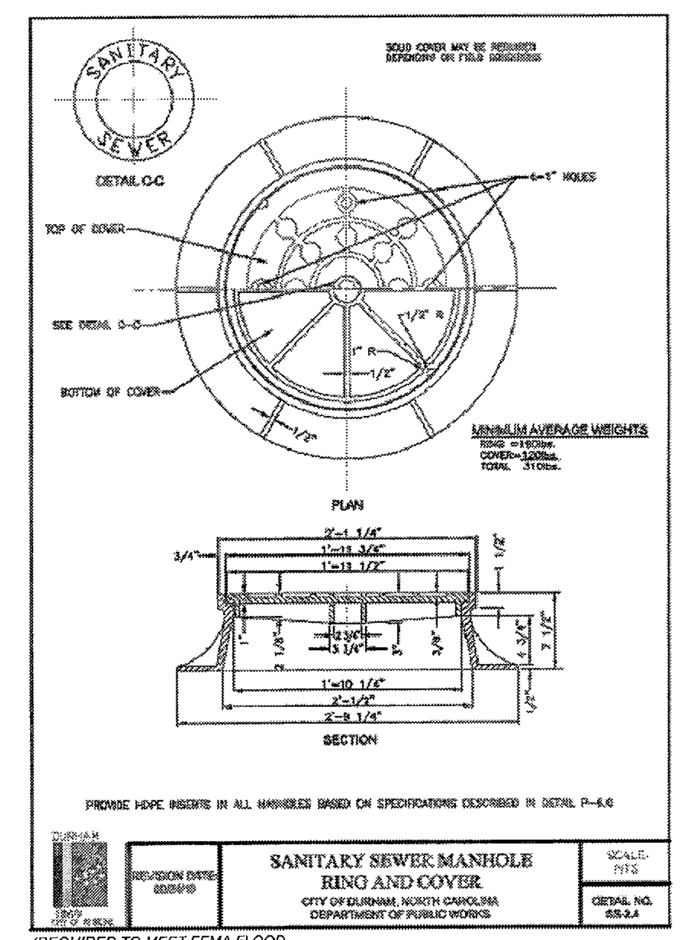

(REQUIRED TO MEET FEMA FLOOD PROOFING REQUIREMENTS).

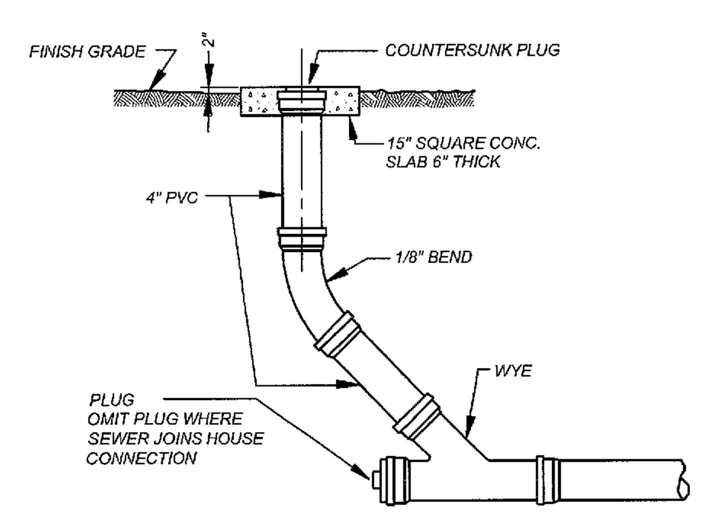

SANITARY SEWER CLEANOUT

PRELIMINARY DESIGN - NOT RELEASED FOR CONSTRUCTION

COMMERCIAL SITE DESIGN, PLLC REGISTERED CORPORATION P-0266 NORTH CAROLINA RALEIGH, NORTH CAROLINA

NORTH CAROLINA PROFESSIONAL ENGINEER SEAL 24501 W. BRIAN BURCHETT 10-11-12

REV	DATE	DESCRIPTION	BY	ISSUE/REF
1	04-05-11	PERMIT ISSUE	RCN	
2	07-27-11	REVISED PER DRB REVIEW #1	JCB	
3	11-28-11	REVISED PER DRB REVIEW #2	JWR	
4	02-15-12	MSPU REVIEW COMMENTS #1	JWR	
5	04-16-12	MSUP REVIEW COMMENTS #2 & DRB REVIEW #3	RCN	
6	06-20-12	REVERT TO ORIGINAL GRADING	RCN	
7	08-22-12	MSUP REVIEW COMMENTS #3	DHG	
8	10-09-12	MSUP REVIEW COMMENTS #5	RCN	

COMMERCIAL SITE DESIGN
8312 CREEDMOOR ROAD RALEIGH, NORTH CAROLINA 27613
(919) 848-6121, FAX: (919) 848-3741 WWW.CSITEDESIGN.COM

McDonald's®

THESE PLANS AND SPECIFICATIONS ARE THE PROPERTY OF McDONALD'S CORPORATION AND SHALL NOT BE REPRODUCED WITHOUT THEIR WRITTEN PERMISSION.

OFFICE: RALEIGH REGION
ADDRESS: 4601 SIX FORKS ROAD - SUITE 200 - RALEIGH, N.C. 27609

PLAN APPROVAL

	SIGNATURE (2 REQUIRED)	DATE
REGIONAL MGR.		
REGIONAL DEV. DIRECTOR		
REGIONAL CONSTRUCTION MGR.		
REGIONAL REAL ESTATE MGR.		
CO-SIGN SIGNATURES		
AREA CONSTRUCTION MGR.		
CONTRACTOR		

STATUS	DATE	BY
FINAL	-	-
PLAN CHECKED	-	-
AS-BUILT	-	-

PLAN SCALE: NOT TO SCALE

STREET ADDRESS
1010 NORTH MIAMI BOULEVARD

CITY: DURHAM
STATE: NORTH CAROLINA
COUNTY: DURHAM
TAX PARCEL NUMBER: 0831-12-86-7423
LOCATION CODE NUMBER: 32-0135
CSD FILENAME: MCD0708-DT3

C-10
DETAILS

X:\MCD - McDonalds\0700 Sites\0708 - Durham, NC @ Wellons Village 32-0135\CAD\MCD0708-DT3.dwg, 10/11/2012 7:35:35 AM, chrisn

FP-43 Modular Outdoor Menu Board

Everbrite
Identity Systems Division

FP-43 Outdoor Menu Board w/ Flip Adder

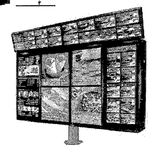

OPTIONAL:
FP-43 Outdoor Menu Board w/ Topper

Illumination: 4 - F60T12 CW/HO
2 - F35T12 CW/HO
2 - F24T12 CW/HO
2 - F80T12 CW/HO

Electrical: 4.9 Amps / 1.6 Amps (flipboard) 120V 60Hz

Ballast: Advance #RC-4560-TP
Power Lighting #V2294L8-16
Power Lighting #V12L4-12

Ship Weight: 197 lbs.

Other:
- Modular design for increased flexibility
- Adjustable channels for easy menu modification
- Optional kit to accept Customer Order Display and/or speaker
- Flipboard panel can rotate 180 degrees to display two dayparts
- Please call Florida Plastics for strips and grids
- Topper only allowed with 4th column static board. Cannot have flip adder and topper.

Everbrite, LLC, 315 Marion Ave., South Milwaukee, WI, 53172 P: 888-857-4078 F: 877-430-7363 www.everbrite.com

Pedestal Installation and Foundation Requirements

The typical foundation minimum requirement for the FP43-3 BOARD is 24" in diameter and 45" deep. Four 5/8" anchor bolts in a square 8" pattern need to be installed to mount the sign base to the foundation. **(Refer to Figure 2)**

1. Un-box pedestal. Please note that the holes closest to the edge in the top plate of the pedestal are positioned toward the **front of the menu board.**
2. After applying the appropriate leveling hardware to the anchor bolts, position the pedestal over the anchor bolts. Insure pedestal base is level.
3. Remove left side access cover and pull the 120 VAC wires up through the left channel of the pedestal and out through the access opening.
4. Install all hardware that came with your anchor bolt kit per Figure 2 to secure pedestal. Tighten all top anchor bolt nuts.

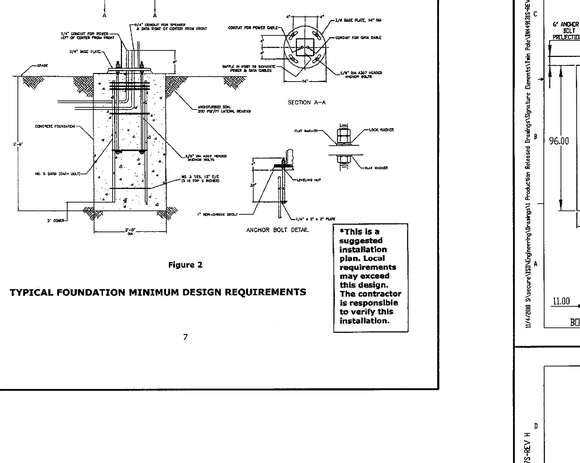

***This is a suggested installation plan. Local requirements may exceed this design. The contractor is responsible to verify this installation.**

Figure 2

TYPICAL FOUNDATION MINIMUM DESIGN REQUIREMENTS

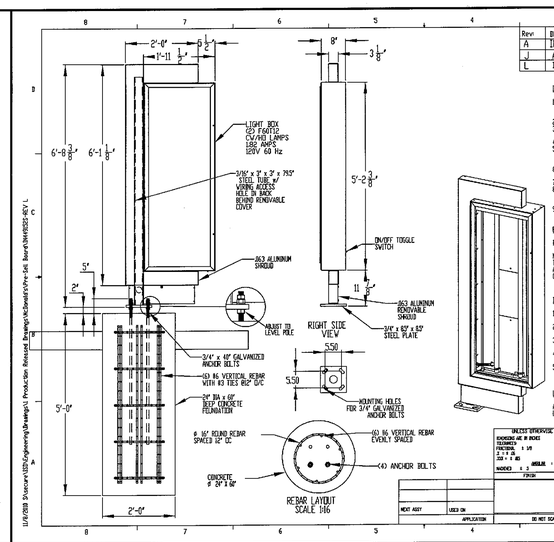

Rev	DESCRIPTION	DATE	APPROVED
A	INITIAL RELEASE.	07JUN07	
J	ADDED 4 NUTS	03/08/10	
L	DELETED GROUT INSTALLATION	08NOV10	LMR

INSTALLATION INSTRUCTIONS:

1. STAKE FOUNDATION AREA AND CONFIRM FINAL GRADE REQUIREMENTS WITH G.C. (TOP OF FOUNDATION IS 6" ABOVE PAVEMENT (GRADE)
2. EXCAVATE FOUNDATION AREA.
3. POUR FOUNDATION (4 Ø 24" x 48" DEEPTH) INSERT (4) Ø 3/4" x 48" ANCHOR BOLTS.
4. ALLOW CONCRETE CURE TIME AS REQUIRED
5. PLACE (4) 4 3/4" LEVELING NUTS AND WASHERS ON THE FOUR ANCHOR BOLTS TO PROVIDE A 2.00" GAP BETWEEN THE FOUNDATION AND BASE PLATE OF THE POLE.
6. POSITION THE POLE ONTO THE ANCHOR BOLTS AND SECURE IN PLACE WITH (8) 3/4" HEX NUTS AND WASHERS.
7. LEVEL POLE BY ADJUSTING THE 3/4" NUTS.
8. MAKE WIRING CONNECTION BY TEMPORARILY REMOVING BACK CAVIAR SHROUD AND USING ACCESS HOLE IN THE BACK OF THE TUBE TO CONNECT WIRES. REATTACH CAVIAR SHROUD.
9. CLEAN SITE OF PACKAGING MATERIAL

ELECTRICAL:

L82 AMPS, 120VOLTS, 60Hz

NOTE: THIS SIGN IS INTENDED TO BE INSTALLED IN ACCORDANCE WITH THE REQUIREMENTS OF ARTICLE 600 OF THE NATIONAL ELECTRICAL CODE AND/OR OTHER APPLICABLE LOCAL CODES. THIS INCLUDES THE PROPER GROUNDING OF THE SIGN.

DESIGN NOTES

1) ALL CONCRETE EXCEPT CONCRETE USED FOR BACK FILL SHALL DEVELOP A MINIMUM COMPRESSIVE STRENGTH OF 3000 P.S.I.
2) CONCRETE BASE DESIGNED USING GUIDE TO AVERAGE SOILS HAVING AN ALLOWABLE BEARING CAPACITY OF 2000 P.S.F./FT.
3) ALL FITTING EXCAVATIONS ARE TO BE FREE OF WATER AND FOREIGN MATTER BEFORE PLACING CONCRETE.
4) IF THESE CONDITIONS DO NOT EXIST, A NEW BASE MUST BE DESIGNED BY A LICENSED STRUCTURAL ENGINEER.
5) THIS ASSEMBLY AND FOUNDATION IS DESIGNED TO WITHSTAND 150 MPH EXPOSURE C WIND LOADS.

LANDSCAPE NOTE:
Area above the base plate is to remain exposed. No shroud or landscape material should be placed on top of the base plate.

UNLESS OTHERWISE SPECIFIED
DIMENSIONS ARE IN INCHES
TOLERANCES
FRACTIONAL ± 1/16
.X ± 0.25
.XX ± 0.10
.XXX ± 0.05
ANGULAR ± 2°
MACHINED ± 0.5
FINISH
DEBURR
BREAK CORNERS
DO NOT SCALE DRAWING

	NAME	DATE
DRAWN	LMR	07/07/07
CHECKED		
ENGINEER		
ISSUED	TMS	12/07/06
CUSTOMER SERV.		
ENG APPR.		

PRODUCT: McDONALD'S ARCADE BUILDING
PRE-SELL BOARD
TITLE: INSTALL SHEET

PROPRIETARY AND CONFIDENTIAL
THE INFORMATION CONTAINED IN THIS DRAWING IS THE SOLE PROPERTY OF EVERBRITE, LLC. ANY REPRODUCTION IN PART OR AS A WHOLE WITHOUT THE WRITTEN PERMISSION OF EVERBRITE, LLC IS STRICTLY PROHIBITED.

SIZE B DWG. NO. IN449152S REV L
SCALE: 1:16 TYPE: INSTALL SHEET 1 OF 1

NEXT ASSY | USED ON | APPLICATION

11/6/2008 S:\secure\ISD\Engineering\Drawings\1 Production Released Drawings\McDonald's\Fp-43 Menu Board\IN449152-REV L

Pedestal Installation and Foundation Requirements

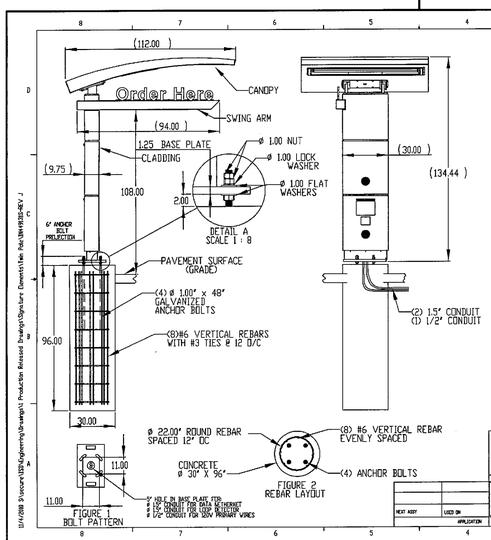

Rev	DESCRIPTION	DATE	APPROVED
A	INITIAL RELEASE	16FEB07	
I	ADDED STEP FOR GROUT INSTALLATION	03/26/10	
J	DELETED GROUT NOTE	04NOV10	LMR

INSTALLATION INSTRUCTIONS:

1. STAKE FOUNDATION AREA AND CONFIRM FINAL GRADE REQUIREMENTS WITH G.C. (TOP OF FOUNDATION IS 6" ABOVE PAVEMENT (GRADE)
2. EXCAVATE FOUNDATION AREA.
3. POUR FOUNDATION (4' Ø 30" x 96" DEPTH, OR 72" SQUARE x 30" DEEP) INSERT (4Ø 1.00 x 48" ANCHOR BOLTS AND (8)#6 VERTICAL REBARS WITH #3 TIES @ 12" CENTERS.
4. ALLOW CONCRETE CURE TIME AS REQUIRED
5. PLACE (4) Ø 1.00" LEVELING NUTS AND WASHERS ON THE FOUR ANCHOR BOLTS TO PROVIDE A 2.00" GAP BETWEEN THE FOUNDATION AND BASE PLATE OF THE POLE. SEE DETAIL A).
6. POSITION THE POLE ONTO THE ANCHOR BOLTS AND SECURE IN PLACE WITH (8) 1.00" HEX NUTS AND WASHERS. SEE DETAIL A).
7. LEVEL POLE BY ADJUSTING THE 1.00" NUTS. SEE DETAIL A).
8. INSTALL CANOPY PER CANOPY INSTALL SHEET (IN449038S), USE TWIN POLE MOUNTING HOLES ONLY.
9. INSTALL SWING ARM PER SWING ARM INSTALL SHEET (IN449038S)
10. INSTALL CLADDING PER INSTRUCTIONS INCLUDED WITH THE CLADDING.
11. INSTALL CCD UNIT PER INSTRUCTIONS INCLUDED WITH THE CCD UNIT.
12. TOUCH UP POLE, CANOPY AND SWING ARM WITH SUPPLIED PAINT.
13. CLEAN SITE OF PACKAGING MATERIAL

ELECTRICAL:
CANOPY: 3.64 AMPS, 120VOLTS, 60Hz
L82 LED 1.5 AMPS, 120VOLTS, 60Hz
L82 LED 2.5 AMPS, 120VOLTS, 60Hz

NOTE: THIS SIGN IS INTENDED TO BE INSTALLED IN ACCORDANCE WITH THE REQUIREMENTS OF ARTICLE 600 OF THE NATIONAL ELECTRICAL CODE AND/OR OTHER APPLICABLE LOCAL CODES. THIS INCLUDES THE PROPER GROUNDING OF THE SIGN.

DESIGN NOTES

1) ALL CONCRETE EXCEPT CONCRETE USED FOR BACK FILL SHALL DEVELOP A MINIMUM COMPRESSIVE STRENGTH OF 3000 P.S.I.
2) CONCRETE BASE DESIGNED USING GUIDE TO AVERAGE SOILS HAVING AN ALLOWABLE BEARING CAPACITY OF 2000 P.S.F./FT.
3) ALL FITTING EXCAVATIONS ARE TO BE FREE OF WATER AND FOREIGN MATTER BEFORE PLACING CONCRETE.
4) IF THESE CONDITIONS DO NOT EXIST, A NEW BASE MUST BE DESIGNED BY A LICENSED STRUCTURAL ENGINEER.
5) THIS ASSEMBLY AND FOUNDATION IS DESIGNED TO WITHSTAND 150 MPH EXPOSURE C WIND LOADS.

LANDSCAPE NOTE:
Area above the base plate is to remain exposed. No shroud or landscape material should be placed on top of the base plate.

UNLESS OTHERWISE SPECIFIED
DIMENSIONS ARE IN INCHES
TOLERANCES
FRACTIONAL ± 1/16
.X ± 0.25
.XX ± 0.10
.XXX ± 0.05
ANGULAR ± 2°
MACHINED ± 0.5
FINISH
DEBURR
BREAK CORNERS
DO NOT SCALE DRAWING

	NAME	DATE
DRAWN	LMR	25JAN07
CHECKED		
ENGINEER		
ISSUED	TMS	12/07/06
CUSTOMER SERV.		
ENG APPR.		

PRODUCT: McDONALD'S ARCADE BUILDING
TWIN POLE w/ FIBERGLASS CANOPY
TITLE: INSTALL INSTRUCTIONS

PROPRIETARY AND CONFIDENTIAL
THE INFORMATION CONTAINED IN THIS DRAWING IS THE SOLE PROPERTY OF EVERBRITE, LLC. ANY REPRODUCTION IN PART OR AS A WHOLE WITHOUT THE WRITTEN PERMISSION OF EVERBRITE, LLC IS STRICTLY PROHIBITED.

SIZE B DWG. NO. IN449131S REV J
SCALE: 1:32 TYPE: INSTALL SHEET 1 OF 1

NEXT ASSY | USED ON | APPLICATION

11/4/2008 S:\secure\ISD\Engineering\Drawings\1 Production Released Drawings\Signature Elements\MCD Twin Pole\IN449131S-REV J

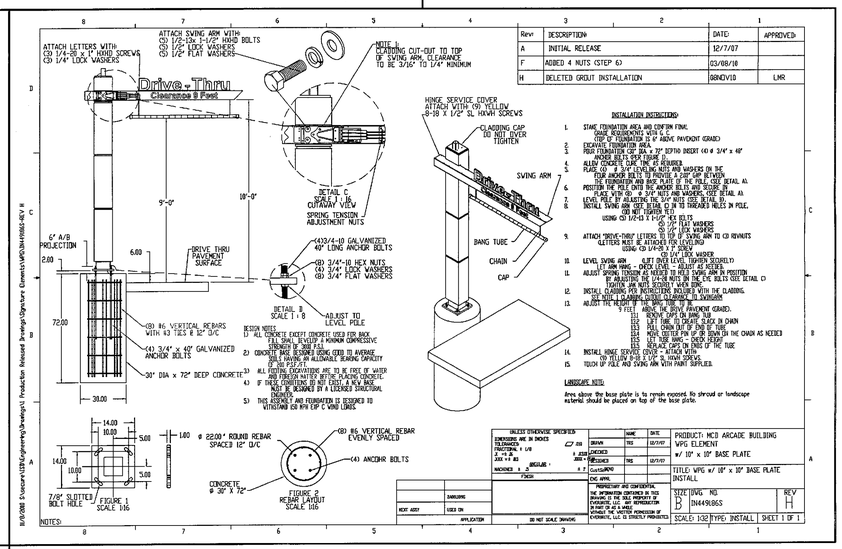

Rev	DESCRIPTION	DATE	APPROVED
A	INITIAL RELEASE	12/7/07	
F	ADDED 4 NUTS (STEP 6)	03/08/10	
H	DELETED GROUT INSTALLATION	08NOV10	LMR

INSTALLATION INSTRUCTIONS:

1. STAKE FOUNDATION AREA AND CONFIRM FINAL GRADE REQUIREMENTS WITH G.C. (TOP OF FOUNDATION IS 6" ABOVE PAVEMENT (GRADE)
2. EXCAVATE FOUNDATION AREA.
3. POUR FOUNDATION CUP (DIA x 30" DEPTH) INSERT (4) Ø 3/4" x 48" ANCHOR BOLTS (SEE DETAIL B)
4. ALLOW CONCRETE CURE TIME AS REQUIRED
5. PLACE (8) Ø 3/4" LEVELING NUTS AND WASHERS ON THE FOUR ANCHOR BOLTS TO PROVIDE A 2.00" GAP BETWEEN THE FOUNDATION AND BASE PLATE OF THE POLE. (SEE DETAIL A).
6. POSITION THE POLE ONTO THE ANCHOR BOLTS AND SECURE IN PLACE WITH (8) 3/4" HEX NUTS AND WASHERS. (SEE DETAIL A).
7. LEVEL POLE BY ADJUSTING THE 3/4" NUTS (SEE DETAIL B).
8. INSTALL SWING ARM (SEE DETAIL D) IN TO THREADED RODS IN POLE. (DO NOT TIGHTEN YET)
9. USING (2) 1/2x13 X 1-1/2" HEX BOLTS, (2) 1/2" FLAT WASHERS (2) 1/2" LOCK WASHERS TIGHTEN SWING ARM TO CD MOUNTING BRACKET
10. ATTACH "DRIVE-THRU" LETTERS TO TOP OF SWING ARM TO CD MOUNTS (LETTERS MUST BE ATTACHED FOR LEVELING USING CD 1/4-20 X 1" SCREW (2) 1/4" LOCK WASHER
11. LEVEL SWING ARM. (LIFT OVER LEVEL TIGHTEN SECURELY) (LIT ARM HARD - CHECK LEVEL - ADJUST AS NEEDED)
12. ADJUST SPRING TENSION AS NEEDED TO HOLD SWING ARM IN POSITION BY ADJUSTING THE 1/4-20 NUTS ON THE CHAIN (SEE DETAIL C)
13. INSTALL CLADDING PER INSTRUCTIONS INCLUDED WITH THE CLADDING. (DO NOT OVER TIGHTEN CLADDING CAP SCREWS)
14. ADJUST THE HEIGHT OF THE CHAIN TO 9'-10" ABOVE THE DRIVE PAVEMENT (GRADE).
   (1) REMOVE CAPS ON BANG TUB
   (2) LIFT BANG TUB CAREFULLY, BLOCK IN CHAIN
   (3) PULL CHAIN OUT OF END OF TUBE
   (4) MOVE CUTTER PIN UP OR DOWN ON THE CHAIN AS NEEDED
   (5) PUT TUBE BANG - CHECK LEVEL
   (6) REPLACE CAPS ON ENDS OF THE TUBE
15. INSTALL HINGE SERVICE COVER (DO FOLLOW 8-18 X 1/2" SL HWHM SCREWS.
16. TOUCH UP POLE AND SWING ARM WITH PAINT SUPPLIED.

LANDSCAPE NOTE:
Area above the base plate is to remain exposed. No shroud or landscape material should be placed on top of the base plate.

UNLESS OTHERWISE SPECIFIED
DIMENSIONS ARE IN INCHES
TOLERANCES
FRACTIONAL ± 1/16
.X ± 0.25
.XX ± 0.10
.XXX ± 0.05
ANGULAR ± 2°
MACHINED ± 0.5
FINISH
DEBURR
BREAK CORNERS
DO NOT SCALE DRAWING

	NAME	DATE
DRAWN	LMR	12/07/07
CHECKED		
ENGINEER		
ISSUED	TMS	12/07/07
CUSTOMER SERV.		
ENG APPR.		

PRODUCT: MCD ARCADE BUILDING
WPG ELEMENT
w/ 10" x 10" BASE PLATE
TITLE: WPG w/ 10" x 10" BASE PLATE INSTALL

PROPRIETARY AND CONFIDENTIAL
THE INFORMATION CONTAINED IN THIS DRAWING IS THE SOLE PROPERTY OF EVERBRITE, LLC. ANY REPRODUCTION IN PART OR AS A WHOLE WITHOUT THE WRITTEN PERMISSION OF EVERBRITE, LLC IS STRICTLY PROHIBITED.

SIZE B DWG. NO. IN449186S REV H
SCALE: 1:32 TYPE: INSTALL SHEET 1 OF 1

NEXT ASSY | USED ON | APPLICATION

11/6/2008 S:\secure\ISD\Engineering\Drawings\1 Production Released Drawings\Signature Elements\MCD Wpg\IN449186S-REV H

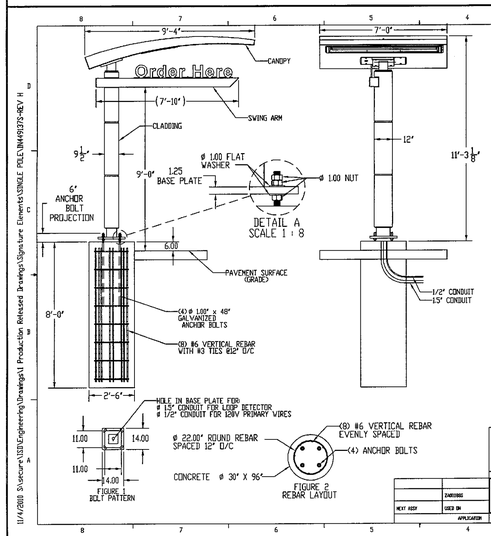

Rev	DESCRIPTION	DATE	APPROVED
A	INITIAL RELEASE	26JAN07	
G	ADDED STEP FOR GROUT INSTALLATION	03/26/10	
H	DELETED GROUT NOTE	04NOV10	LMR

INSTALLATION INSTRUCTIONS:

1. STAKE FOUNDATION AREA AND CONFIRM FINAL GRADE REQUIREMENTS WITH G.C. (TOP OF FOUNDATION IS 6" ABOVE PAVEMENT (GRADE)
2. EXCAVATE FOUNDATION AREA.
3. POUR FOUNDATION (4' Ø 30" x 72" DEPTH) INSERT (4) Ø 1.00 x 48" ANCHOR BOLTS (SEE FIGURE 2).
4. ALLOW CONCRETE CURE TIME AS REQUIRED
5. PLACE (4) Ø 1.00" LEVELING NUTS AND WASHERS ON THE FOUR ANCHOR BOLTS TO PROVIDE A 2.00" GAP BETWEEN THE FOUNDATION AND BASE PLATE OF THE POLE. (SEE DETAIL A).
6. POSITION THE POLE ONTO THE ANCHOR BOLTS AND SECURE IN PLACE WITH (8) 1.00" HEX NUTS AND WASHERS. (SEE DETAIL A).
7. LEVEL POLE BY ADJUSTING THE 1.00" NUTS. (SEE DETAIL A).
8. INSTALL CANOPY PER CANOPY INSTALL SHEET (IN449038S), USE SINGLE POLE MOUNTING HOLES ONLY.
9. INSTALL SWING ARM PER SWING ARM INSTALL SHEET (IN449038S)
10. INSTALL CLADDING PER CLADDING INSTALL SHEET (IN449038S)
11. TOUCH UP POLE AND SWING ARM WITH SUPPLIED PAINT.
12. CLEAN SITE OF PACKAGING MATERIAL

ELECTRICAL:
CANOPY: 3.64 AMPS, 120VOLTS, 60Hz

NOTE: THIS SIGN IS INTENDED TO BE INSTALLED IN ACCORDANCE WITH THE REQUIREMENTS OF ARTICLE 600 OF THE NATIONAL ELECTRICAL CODE AND/OR OTHER APPLICABLE LOCAL CODES. THIS INCLUDES THE PROPER GROUNDING OF THE SIGN.

DESIGN NOTES

1) ALL CONCRETE EXCEPT CONCRETE USED FOR BACK FILL SHALL DEVELOP A MINIMUM COMPRESSIVE STRENGTH OF 3000 P.S.I.
2) CONCRETE BASE DESIGNED USING GUIDE TO AVERAGE SOILS HAVING AN ALLOWABLE BEARING CAPACITY OF 2000 P.S.F./FT.
3) ALL FITTING EXCAVATIONS ARE TO BE FREE OF WATER AND FOREIGN MATTER BEFORE PLACING CONCRETE.
4) IF THESE CONDITIONS DO NOT EXIST, A NEW BASE MUST BE DESIGNED BY A LICENSED STRUCTURAL ENGINEER.

LANDSCAPE NOTE:
Area above the base plate is to remain exposed. No shroud or landscape material should be placed on top of the base plate.

UNLESS OTHERWISE SPECIFIED
DIMENSIONS ARE IN INCHES
TOLERANCES
FRACTIONAL ± 1/16
.X ± 0.25
.XX ± 0.10
.XXX ± 0.05
ANGULAR ± 2°
MACHINED ± 0.5
FINISH
DEBURR
BREAK CORNERS
DO NOT SCALE DRAWING

	NAME	DATE
DRAWN	LMR	25JAN07
CHECKED		
ENGINEER		
ISSUED	TMS	12/07/06
CUSTOMER SERV.		
ENG APPR.		

PRODUCT: McDONALD'S ARCADE BUILDING
SINGLE POLE w/ FIBERGLASS CANOPY
TITLE: INSTALL INSTRUCTIONS

PROPRIETARY AND CONFIDENTIAL
THE INFORMATION CONTAINED IN THIS DRAWING IS THE SOLE PROPERTY OF EVERBRITE, LLC. ANY REPRODUCTION IN PART OR AS A WHOLE WITHOUT THE WRITTEN PERMISSION OF EVERBRITE, LLC IS STRICTLY PROHIBITED.

SIZE B DWG. NO. IN449137S REV H
TYPE: INSTALL SHEET 1 OF 1

NEXT ASSY | USED ON | APPLICATION

11/4/2008 S:\secure\ISD\Engineering\Drawings\1 Production Released Drawings\Signature Elements\SINGLE POLE\IN449137S-REV H

REV	DATE	DESCRIPTION	BY	ISSUE/REF
1	04-03-11	PERMIT ISSUE	RCN	
2	07-27-11	REVISED PER DRB REVIEW #1	JCB	
3	11-28-11	REVISED PER DRB REVIEW #2	JWR	
4	02-15-12	MSFU REVIEW COMMENTS #1	JWR	
5	04-16-12	MSUP REVIEW COMMENTS #2 & DRB REVIEW #3	RCN	
6	06-20-12	REVERT TO ORIGINAL GRADING	RCN	

COMMERCIAL SITE DESIGN
(919) 848-6021, FAX: (919) 848-3741
WWW.CSITEDESIGN.COM
8312 CREEDMOOR ROAD
RALEIGH, NORTH CAROLINA 27613

McDonald's®

THESE PLANS AND SPECIFICATIONS ARE THE PROPERTY OF McDONALD'S CORPORATION AND SHALL NOT BE REPRODUCED WITHOUT THEIR WRITTEN PERMISSION.

RALEIGH REGION
4601 SIX FORKS ROAD - SUITE 200 - RALEIGH, N.C. 27609

OFFICE
ADDRESS

PLAN APPROVAL

SIGNATURE (2 REQUIRED)	DATE
REGIONAL MGR.	
REGIONAL DEV. DIRECTOR	
REGIONAL CONSTRUCTION MGR.	
REGIONAL REAL ESTATE MGR.	
AREA CONSTRUCTION MGR.	
CONTRACTOR	

CO-SIGN SIGNATURES

STATUS	DATE	BY
FINAL	-	-
PLAN CHECKED	-	-
AS-BUILT	-	-

PRELIMINARY DESIGN - NOT RELEASED FOR CONSTRUCTION

PLAN SCALE: NOT TO SCALE

STREET ADDRESS
1010 NORTH MIAMI BOULEVARD

CITY	STATE
DURHAM	NORTH CAROLINA

COUNTY
DURHAM

TAX PARCEL NUMBER	LOCATION CODE NUMBER
0831-12-86-7423	32-0135

CSD FILENAME:
MCD0708-MD1

C-11
MENU BOARD DETAILS

X:\MCD - McDonalds\0700 Sites\0708 - Durham, NC @ Wellons Village 32-0135\CAD\MCD0708-MD1.dwg, 6/21/2012 10:00:18 AM, cmfsn

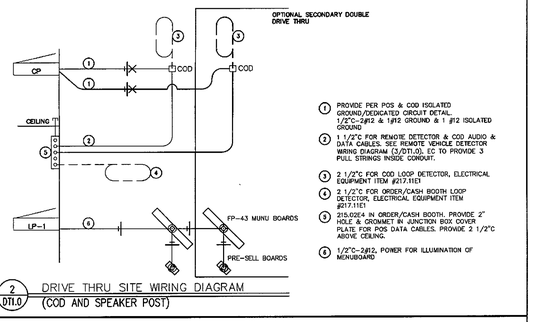

2 / DT1.0 DRIVE THRU SITE WIRING DIAGRAM (COD AND SPEAKER POST)

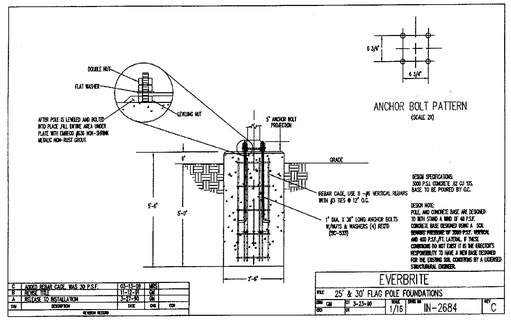

McDONALD'S FLAG POLE

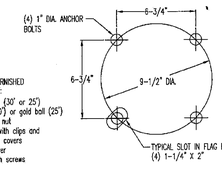

MATERIALS FURNISHED BY EVERBRITE:
(1) Flag pole (30' or 25')
(1) Eagle (30") or gold ball (25") with lock nut
(1) Halyard with clips and protective covers
(1) Base cover
(1) Cleat with screws
(1) Truck

PRELIMINARY REQUIREMENTS:
It is the responsibility of the installer to ensure the general contractor has completed installation of the concrete foundation with anchor bolts PRIOR to any attempt to install the flag pole(s).

CAUTION:
FLAG POLE WILL STAIN IF STORED OUTDOORS WITHOUT REMOVING PROTECTIVE WRAPPING OR IF WRAPPING BECOMES WET WHILE ON FLAG POLE.

INSTALLATION OF FLAG POLE:
1. Remove protective wrapping and unpack hardware.
2. Slide base cover completely onto pole.
3. Mount tie-down cleat using pre-drilled and tapped holes provided (10' off finished grade).
4. Mount truck (pulley) assembly and string halyard (rope).
5. Attach swivel clips and protective vinyl cover to halyard.
6. Mount eagle (30" pole) or gold ball (25" pole). NOTE: Eagle to be positioned to face directly forward in relation to building.
7. Install leveling nuts on 1" galvanized anchor bolts.
8. Position flag pole shoe base over anchor bolts and secure with lock nuts.
9. Position base cover over shoe base and bolts.

Everbrite
315 Marion Avenue, South Milwaukee, WI 53172 414-762-8700
IN165100 12/5/94 LS B

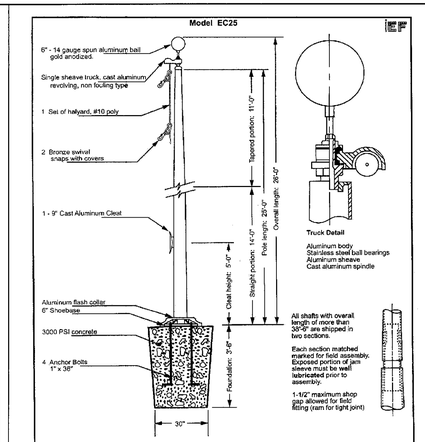

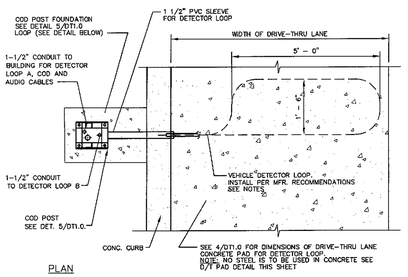

PLAN

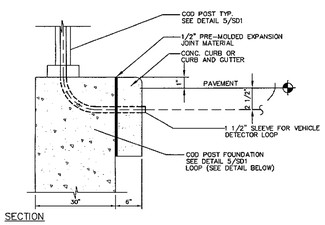

SECTION

5 / SD2 DETECTOR LOOP DETAIL AT C.O.D.
NOT TO SCALE

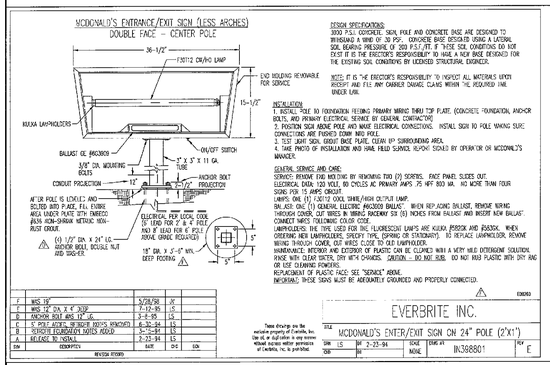

Bollard

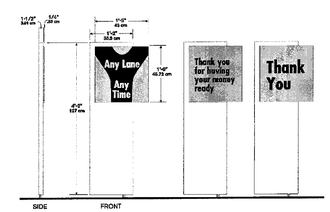

Illumination: N/A

Ship Weight: 26 lbs.

Other:
- PMS 109 yellow reflective message panel with black decal graphics/letters
- Two mounting systems available: direct burial or anchor bolt.
- Additional copy available upon request

Everbrite, LLC, 315 Marion Ave., South Milwaukee, WI, 53172 P: 888-857-4078 F: 877-430-7363 www.everbrite.com

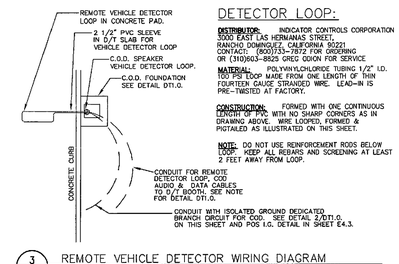

DETECTOR LOOP:

DISTRIBUTOR: INDICATOR CONTROLS CORPORATION
3000 EAST LAS HERMANAS STREET,
RANCHO DOMINGUEZ, CALIFORNIA 90221
CONTACT: (800)733-7872 FOR ORDERING
OR (310)603-8929 ORED CDION FOR SERVICE

MATERIAL: POLYVINYLCHLORIDE TUBING 1/2" I.D. 1000 PSI LOOP MADE FROM ONE LENGTH OF THIN FOURTEEN GAUGE STRANDED WIRE. LEAD-IN IS PRE-TWISTED AT FACTORY.

CONSTRUCTION: FORMED WITH ONE CONTINUOUS LENGTH OF PVC WITH NO SHARP CORNERS AS IN DRAWING ABOVE. WIRE LOOPED, FORMED & PIGTAILED AS ILLUSTRATED ON THIS SHEET.

NOTE: DO NOT USE REINFORCEMENT RODS BELOW LOOP. KEEP ALL REBARS AND SCREENING AT LEAST 2 FEET AWAY FROM LOOP.

3 / SD1 REMOTE VEHICLE DETECTOR WIRING DIAGRAM
NOT TO SCALE

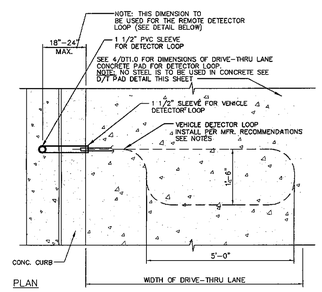

PLAN

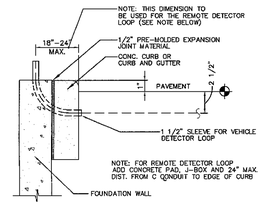

SECTION

6 / SD2 DETECTOR LOOP DETAIL AT DRIVE THRU WINDOW
NONE

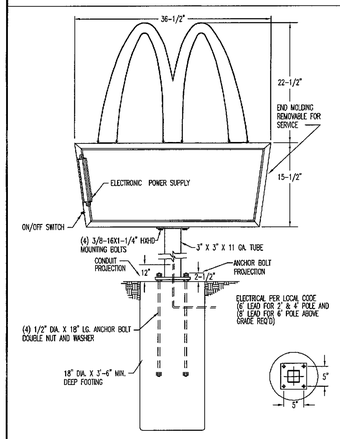

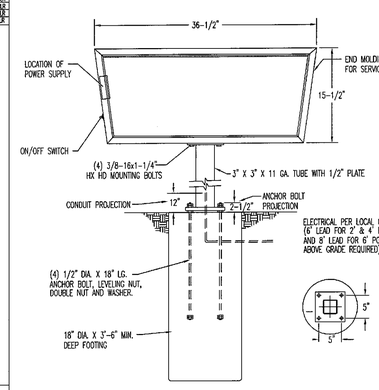

PRELIMINARY DESIGN - NOT RELEASED FOR CONSTRUCTION

REV	DATE	DESCRIPTION	BY	ISS/REF
		PERMIT ISSUE	RCN	
1	04-05-11	REVISED PER DRB REVIEW #1	JCB	
2	07-27-11	REVISED PER DRB REVIEW #2	JWR	
3	11-28-11	MSFU REVIEW COMMENTS #1	JWR	
4	02-15-12	MSUP REVIEW COMMENTS #2 & DRB REVIEW #3	RCN	
5	04-16-12	REVERT TO ORIGINAL GRADING	RCN	
6	06-20-12			

COMMERCIAL SITE DESIGN
(919) 848-4021, FAX: (919) 848-3741
WWW.CSITEDESIGN.COM
8312 CREDMOOR ROAD
RALEIGH, NORTH CAROLINA 27613

McDonald's®

THESE PLANS AND SPECIFICATIONS ARE THE PROPERTY OF McDONALD'S CORPORATION AND SHALL NOT BE REPRODUCED WITHOUT THEIR WRITTEN PERMISSION.

RALEIGH REGION
4601 SIX FORKS ROAD - SUITE 200 - RALEIGH, N.C. 27609

OFFICE
ADDRESS

PLAN APPROVAL

	SIGNATURE (2 REQUIRED)	DATE
REGIONAL MGR.		
REGIONAL DEV. DIRECTOR		
REGIONAL CONSTRUCTION MGR.		
REGIONAL REAL ESTATE MGR.		
AREA CONSTRUCTION MGR.		
CONTRACTOR		

CO-SIGN SIGNATURES

PLAN SCALE: NOT TO SCALE

STREET ADDRESS
1010 NORTH MIAMI BOULEVARD

CITY	STATE
DURHAM	NORTH CAROLINA

COUNTY
DURHAM

TAX PARCEL NUMBER	LOCATION CODE NUMBER
0831-12-86-7423	32-0135

CSD FILENAME:
MCD0708-SD1

STATUS	DATE	BY
FINAL	-	-
PLAN CHECKED	-	-
AS-BUILT	-	-

C-12
SD DETAILS

X:\MCD - McDonalds\0700 Sites\0708 - Durham, NC @ Wellons Village 32-0135\CAD\MCD0708-SD1.dwg, 6/21/2012 10:04:52 AM, chrfdn

NOTES:

1. CONSTRUCTION SHALL MEET ALL OSHA AND A.D.A. STANDARDS AND SPECIFICATIONS.
2. RAMP SURFACES SHALL BE FIXED, FIRM AND NON-SLIP.
3. INTERMEDIATE LEVEL LANDINGS SHALL BE PROVIDED FOR EACH 30 FEET OF HORIZONTAL RUN.
4. TOPS AND BOTTOMS OF RAMPS REQUIRE LEVEL LANDINGS, 60 INCHES BY 60 INCHES.
5. TURNS IN RAMPS REQUIRE LEVEL LANDING, 60 INCHES BY 60 INCHES.
6. HANDRAILS SHALL BE CONTINUOUS AND ON BOTH SIDES OF RAMP WITH ROUNDED ENDS.
7. CLEAR HAND SPACE BETWEEN THE RAIL AND ANY WALL OR PARTITION SHALL BE 1-1/2 INCHES.
8. PROVIDE A MINIMUM OF 48 INCHES CLEAR WIDTH BETWEEN HANDRAILS.
9. CONTRACTOR SHALL COORDINATE FINAL HANDRAIL DESIGN WITH ARCHITECT AND OWNER..
10. EDGE PROTECTION SHALL BE PROVIDED FOR ALL RAMPS (I.E. RAILINGS, WALLS CURBS OR OTHER PROJECTING SURFACE).
11. A 42" PEDESTRIAN FENCE IS NEEDED WHENEVER THERE IS A DROP GREATER THAN 30".

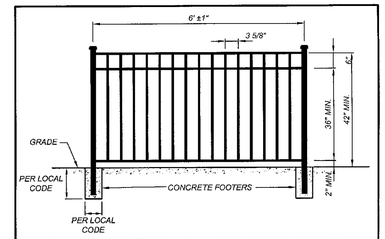

ALUMINUM PEDESTRIAN "GUARD RAIL" DETAIL

(NOT TO SCALE)

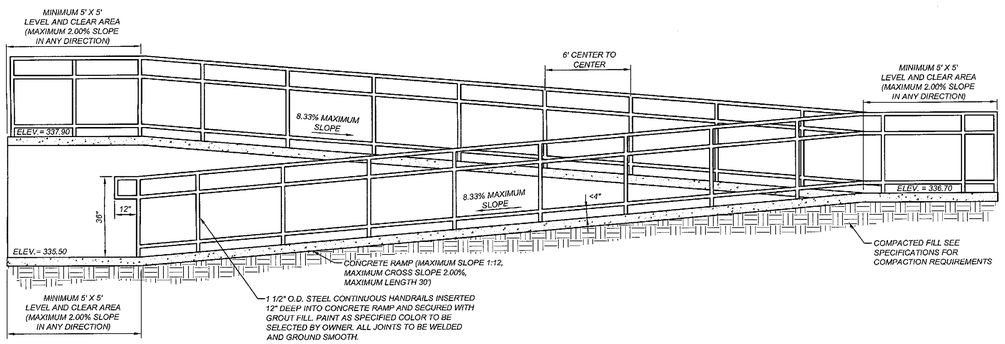

STANDARD ACCESSIBLE RAMP (WITH HANDRAILS/PEDESTRIAN GUARD RAIL) SECTION "A-A"

NOT TO SCALE

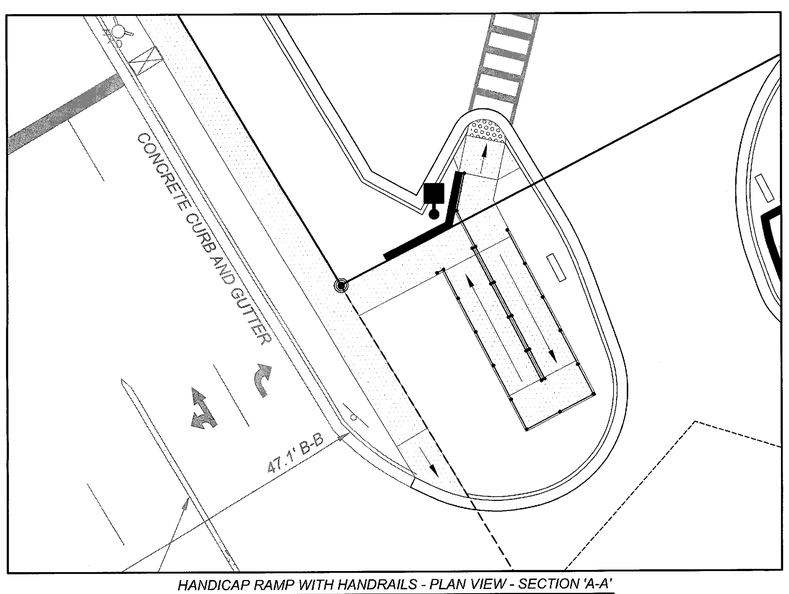

HANDICAP RAMP WITH HANDRAILS - PLAN VIEW - SECTION 'A-A'

SCALE: 1" = 10'

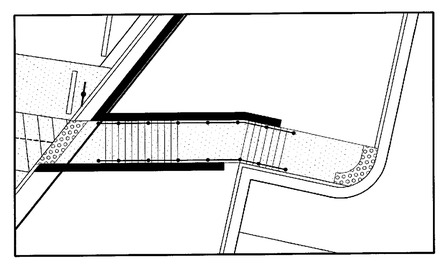

HANDICAP RAMP WITH HANDRAILS - PLAN VIEW - SECTION 'B-B'

SCALE: 1" = 10'

PRELIMINARY DESIGN - NOT RELEASED FOR CONSTRUCTION

REV	DATE	DESCRIPTION	BY	ISSUE/REF
1	04-05-11	PERMIT ISSUE	RCN	
2	07-27-11	REVISED PER DRB REVIEW #1	JCB	
3	11-28-11	REVISED PER DRB REVIEW #2	JWR	
4	02-15-12	MSPU REVIEW COMMENTS #1	JWR	
5	04-16-12	MSUP REVIEW COMMENTS #2 & DRB REVIEW #3	RCN	
6	05-29-12	REVERT TO ORIGINAL GRADING	RCN	

COMMERCIAL SITE DESIGN
(919) 846-0721 FAX: (919) 848-3741
WWW.CSITEDESIGN.COM
8312 GREENMOOR ROAD
RALEIGH, NORTH CAROLINA 27613

McDonald's®
THESE PLANS AND SPECIFICATIONS ARE THE PROPERTY OF McDONALD'S CORPORATION AND SHALL NOT BE REPRODUCED WITHOUT THEIR WRITTEN PERMISSION.

RALEIGH REGION

OFFICE: 4601 SIX FORKS ROAD - SUITE 200 - RALEIGH, N.C. 27609

ADDRESS:

PLAN APPROVAL

SIGNATURE (2 REQUIRED)	DATE
REGIONAL MGR.	
REGIONAL DEV. DIRECTOR	
REGIONAL CONSTRUCTION MGR.	
REGIONAL REAL ESTATE MGR.	
CO-SIGN SIGNATURES	
AREA CONSTRUCTION MGR.	
CONTRACTOR	

STATUS	DATE	BY
FINAL	-	-
PLAN CHECKED	-	-
AS-BUILT	-	-

PLAN SCALE: NOT TO SCALE

STREET ADDRESS: 1010 NORTH MIAMI BOULEVARD

CITY: DURHAM

STATE: NORTH CAROLINA

COUNTY: DURHAM

TAX PARCEL NUMBER: 0831-12-86-7423

LOCATION CODE NUMBER: 32-0135

CSD FILENAME: MCD0708-DT4

C-13

HANDICAP RAMP CROSS SECTIONS

X:\MCD - McDonalds\0700 Sites\0708 - Durham, NC @ Wallace Village 32-0135\CAD\MCD0708-DT4.dwg, 7/11/2012 8:24:53 AM, chrisn

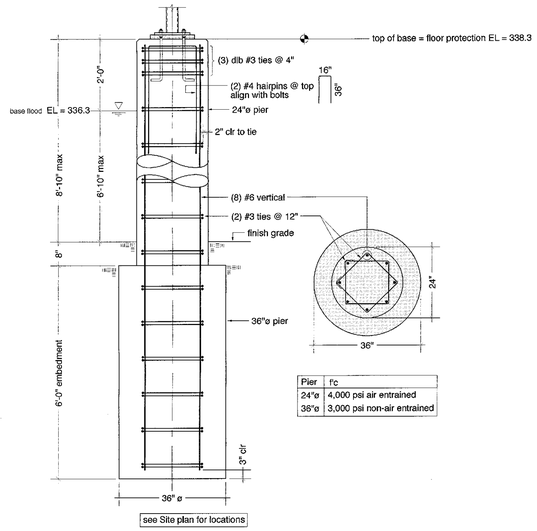

Pier	f'c
24"ø	4,000 psi air entrained
36"ø	3,000 psi non-air entrained

1 / C16 **Light Pole Base**
scale: 1/2"= 1'-0"

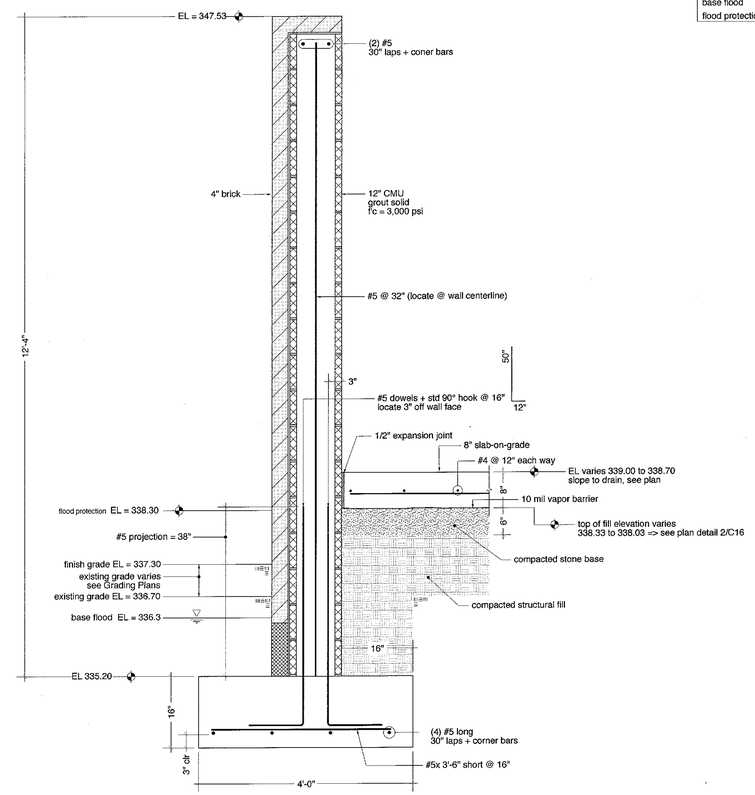

4 / C16 **Trash Corral Wall**
scale: 3/4"= 1'-0"

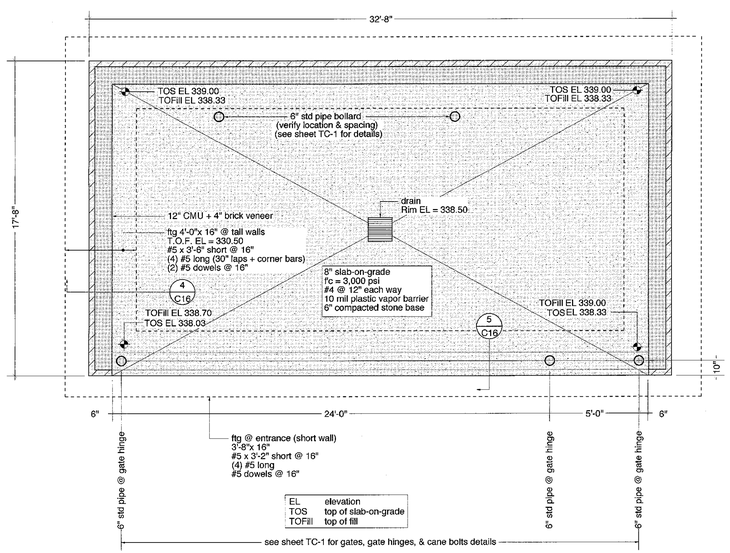

EL	elevation
TOS	top of slab-on-grade
TOFill	top of fill

2 / C16 **Trash Corral Plan**
scale: 1/4"= 1'-0"

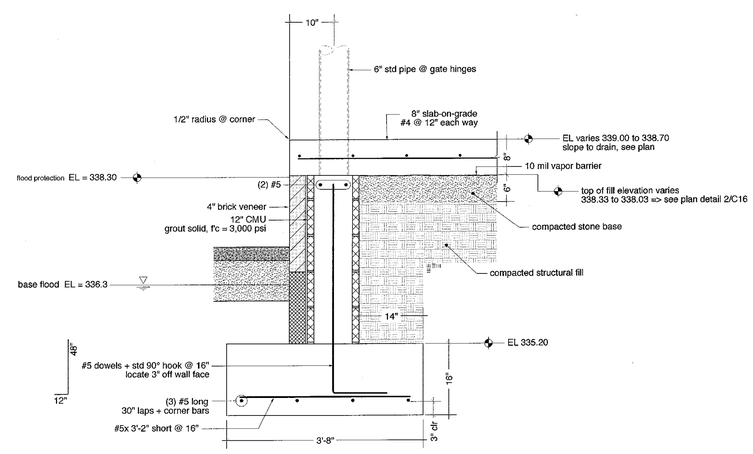

5 / C16 **Trash Corral Wall @ Entrance**
scale: 3/4"= 1'-0"

Design Loads	
wind	90 mph, exposure B
base flood	EL = 336.3 ft
flood protection	EL = 338.3 ft

Structural Notes

GENERAL
1. All construction shall comply with the requirements of the North Carolina State Building Code and local requirements.

FOUNDATION
1. Footings shall bear on residual soils or structural fills with an allowable bearing pressure of not less than 2,000 psf.
2. All footing bottoms are to be inspected and approved by a qualified Engineer prior to the placement of concrete.
3. All fill materials are to be approved by the Engineer prior to placement.
4. Place fill in horizontal layers not to exceed 8.0 inches in depth. Where fill is compacted with hand operated equipment, fill lift heights shall not exceed 4.0 inches.
5. The moisture content of the fill shall be within 3% of the optimum moisture content at the time of compaction.
6. Structural fill shall be compacted to not less than 98% of the Standard Proctor Dry Density.
7. Retaining walls shall obtain design strength prior to the placement of fill as verified by test cylinders.
8. Fill placed at the wall face within a 1:1 slope from the bottom of the retaining wall shall be compacted using hand operated mechanical tamps. No heavy equipment shall be operated within 5 ft of the wall face.
9. See project geotechnical report for project specific information.

CONCRETE
1. All concrete shall be in accordance with ACI 318-05.
2. Concrete type & strength shall be as follows:

Footings & 36" ø pier	3,000 psi	non air-entrained
Slab-on-Grade	3,000 psi	air-entrained
Walls & 24"ø pier	4,000 psi	air-entrained

3. Reinforcing steel shall be ASTM A615 Grade 60.
4. All horizontal steel shall be spliced with Class B lap splices. Provide corner bars at corners.

#4	#5
24 inches	30 inches

5. Concrete cover of reinforcing steel shall be as follows:

Footings	3.0 inches
Retaining Wall	1.5 inches to horizontal steel
	2.0 inches to vertical steel

6. Cure concrete per specification.
7. Exposed concrete shall have a rubbed finish
8. Test cylinders shall be made for each class of concrete for every 50 cubic yards placed in a single pour.

MASONRY
1. All masonry shall be in accordance with ACI 530-05.
2. Design compressive strength of masonry assemblage

8" CMU	f'm = 1,500 psi
12" CMU	f'm = 1,500 psi

3. CMU shall be normal weight ASTM C-90, Grade B, Type 1 block with net compressive strength of 1,900 psi.
4. Cement mortar shall be Type S.
5. Grout for reinforced walls shall have a 28 day compressive strength of 3,000 psi. Spaces to be grouted are to be clean, free of debris and mortar droppings. Provide cleanouts at spaces with reinforcing when grout height exceeds 5 ft. Consolidate grout by mechanical vibration, reconsolidate after initial water loss and settlement.
6. Steel reinforcing shall be ASTM A-615, Grade 60.
7. Masonry shall be in running bond with 50 percent interlock at corners.
8. Provide 2-wire x 9 gage (W1.7) ladder type joint reinforcing @ 16" (every other course)
9. Bond veneer to backup wall per NC State Building Code.

structural engineer

NORTH CAROLINA PROFESSIONAL ENGINEER SEAL 14542 CHARLES E. MURPHY
2-15-12

Charles E. Murphy, P.A. d.b.a.
SGI Engineering
200 N. Greensboro St., Suite B13-A, Carrboro, NC 27510
Phone: (919) 942-7612 Fax: (919) 942-9647

PLAN SCALE: NOT TO SCALE

STREET ADDRESS
1010 NORTH MIAMI BOULEVARD

CITY	STATE
DURHAM	NORTH CAROLINA

COUNTY
DURHAM

TAX PARCEL NUMBER	LOCATION CODE NUMBER
0831-12-86-7423	32-0135
CSD FILENAME: MCD0708-DTL2-WALL	

PRELIMINARY DESIGN - NOT RELEASED FOR CONSTRUCTION

REV	DATE	DESCRIPTION	BY	ISSUE/REF
1	04-05-11	PERMIT ISSUE	RCN	
2	07-27-11	REVISED PER DRB REVIEW #1	JCB	
3	11-28-11	REVISED PER DRB REVIEW #2	JWR	
5	4-16-12	MSUP review comments #2 and DRB revision #3		
6	8-19-12	corral walls @ revised grading plan		

COMMERCIAL SITE DESIGN
8372 CREEDMOOR ROAD
RALEIGH, NORTH CAROLINA 27615
(919) 848-4721, FAX: (919) 848-3741
WWW.CSITEDESIGN.COM

McDonald's®

THESE PLANS AND SPECIFICATIONS ARE THE PROPERTY OF McDONALD'S CORPORATION AND SHALL NOT BE REPRODUCED WITHOUT THEIR WRITTEN PERMISSION.

RALEIGH REGION
4601 SIX FORKS ROAD - SUITE 200 - RALEIGH, N.C. 27609

OFFICE
ADDRESS

PLAN APPROVAL

SIGNATURE (2 REQUIRED)	DATE
REGIONAL MGR.	
REGIONAL DEV. DIRECTOR	
REGIONAL CONSTRUCTION MGR.	
REGIONAL REAL ESTATE MGR.	
AREA CONSTRUCTION MGR.	
CONTRACTOR	

CO-SIGN SIGNATURES

STATUS	DATE	BY
FINAL	-	-
PLAN CHECKED	-	-
AS-BUILT	-	-

C-15
TRASH CORRAL AND LIGHT POLE BASE DETAILS

X:\MCD - McDonalds\0700 Sites\0708 - Durham, NC @ Wellons Village 32-0135\CAD\MCD0708-DTL2-WALL.dwg, 2/17/2012 8:48:45 AM, chrisn

Figure 1, Tree Planting Detail

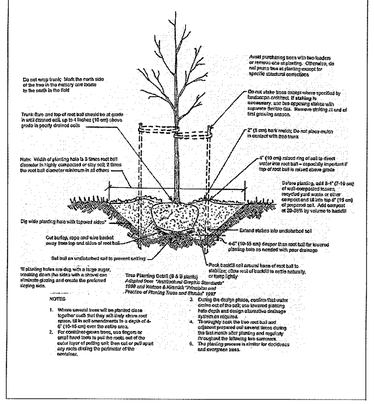

Figure 3, Shrub Planting Detail

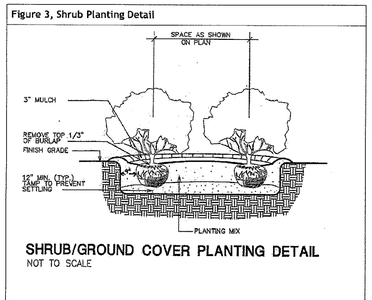

SHRUB/GROUND COVER PLANTING DETAIL

NOT TO SCALE

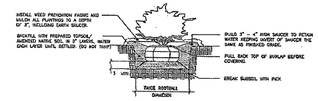

SPECIMEN SHRUB PLANTING DETAIL

NO SCALE

From Horvath Associates, PA. 2005

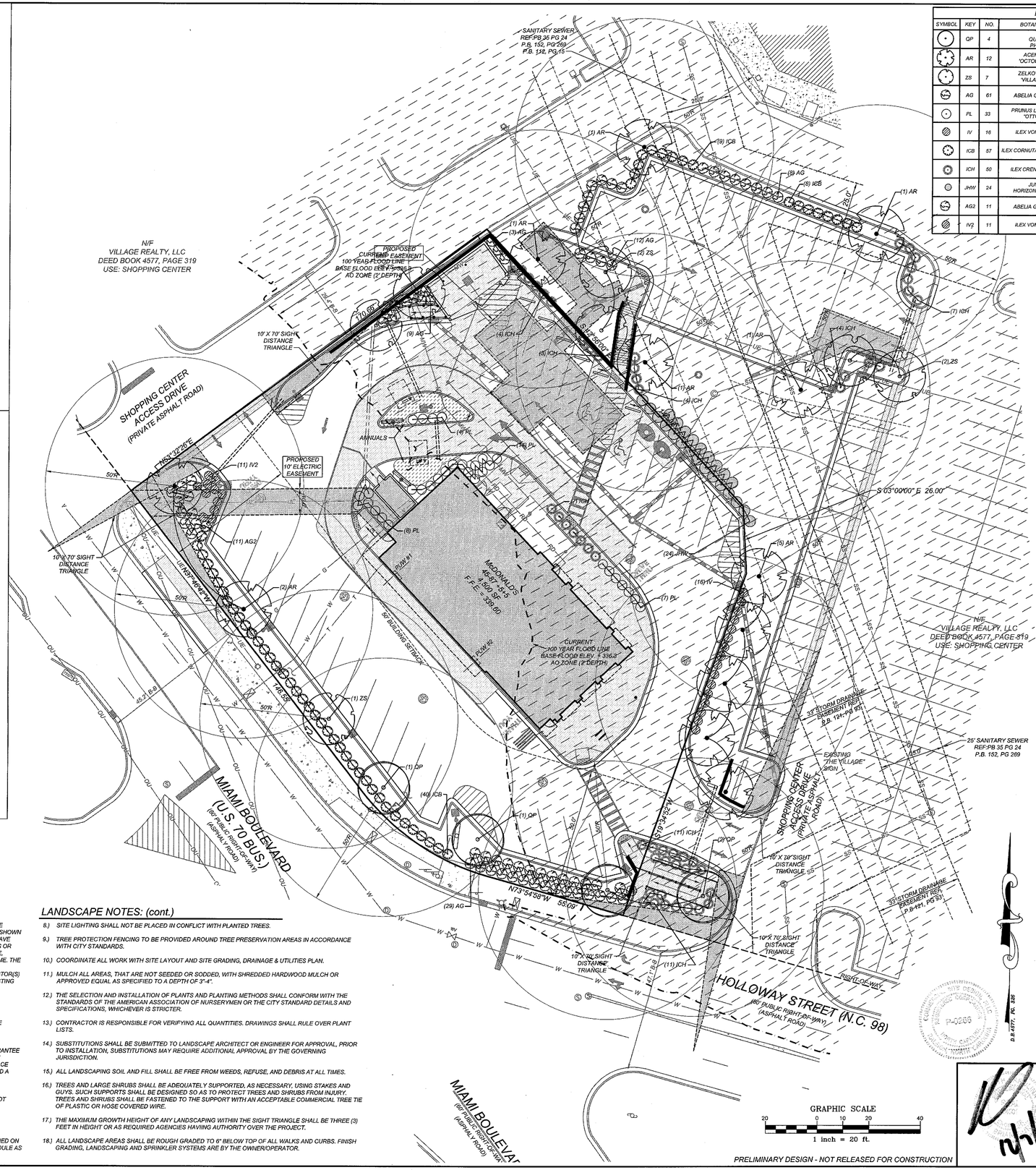

PRELIMINARY DESIGN - NOT RELEASED FOR CONSTRUCTION

PLANTING SCHEDULE (SEE LANDSCAPING NOTE #12)

SYMBOL	KEY	NO.	BOTANICAL NAME	COMMON NAME	CALIPER	HEIGHT	ROOT	COMMENTS
	QP	4	QUERCUS PHELLOS	WILLOW OAK	2 1/2"	-	B & B	STREET YARD/ VUA
	AR	12	ACER RUBRUM 'OCTOBER GLORY'	OCTOBER GLORY RED MAPLE	2 1/2" - 3"	-	B & B	STREET YARD/ VUA
	ZS	7	ZELKOVA SERRATA "VILLAGE GREEN"	VILLAGE GREEN ZELKOVA	2 1/2" - 3"	-	B & B	STREET YARD/ VUA
	AG	61	ABELIA GRANDIFLORA	GLOSSY ABELIA	-	15" - 18"	CONT.	3 GAL. MIN.
	PL	33	PRUNUS LAUROCERASUS 'OTTO LUYKEN'	OTTO LUYKEN ENGLISH LAUREL	-	15" - 18"	CONT.	3 GAL. MIN.
	IV	16	ILEX VOMITORIA NANA	DWARF YAUPON	-	12" - 15"	CONT.	3 GAL. MIN.
	ICB	57	ILEX CORNUTA 'BURFORDII NANA'	DWARF BURFORD HOLLY	-	15" - 18"	CONT.	3 GAL. MIN.
	ICH	50	ILEX CRENATA HELLERI	HELLERS JAPANESE HOLLY	-	15" - 18"	CONT.	3 GAL. MIN.
	JHW	24	JUNIPERUS HORIZONTALIS WILTONI	BLUE RUG JUNIPER	-	12" - 18"	CONT.	3 GAL. MIN.
	AG2	11	ABELIA GRANDIFLORA	GLOSSY ABELIA	-	24"	CONT.	TRANSFORMER SCREENING
	IV2	11	ILEX VOMITORIA NANA	DWARF YAUPON	-	24"	CONT.	TRANSFORMER SCREENING

IT IS THE GENERAL CONTRACTOR'S RESPONSIBILITY TO COORDINATE WITH THE IRRIGATION CONTRACTOR, FOR IRRIGATION SLEEVE SIZE, FOR IRRIGATION SYSTEM.

LANDSCAPE CALCULATIONS:

STREETYARD:
298 LF / 40 = 7 - 2 1/2" TREES REQUIRED
7 TREES PROVIDED
298 LF / 3 = 99 SHRUBS REQUIRED
46 ABELIAS
53 HOLLYS
99 SHRUBS PROVIDED

VEHICULAR USE AREA:
33,196 SF / 2,000 = 17 TREES REQUIRED
10 RED MAPLE
7 VILLAGE GREEN ZELKOVA
17 TREES PROVIDED

33,196 SF / 250 = 132 SHRUBS REQUIRED
16 DWARF YAUPONS
45 HELLERI HOLLYS
26 OTTO LUYKEN
33 ABELIA
17 BURFORD HOLLY
137 SHRUBS PROVIDED

SHADING DENOTES AREA LOCATED WITHIN FLOOD ZONE "AO" +2

PARKING INFORMATION (ON-SITE)

TOTAL SPACES							
30	28	SPACES	9'	X	20'	@	60 °
	2	SPACES	8'	X	20'	@	60 °

UTILITY INFORMATION

	SIZE	TYPE	LOCATION
SANITARY SEWER	12"	PUBLIC	REAR OF SITE
WATER	6" & 12"	PUBLIC	ALONG STREETS
STORM SEWER	6"	BOX CULVERT	REAR OF SITE
ELECTRIC		OVERHEAD	ALONG STREETS
GAS		PUBLIC	OTHER SIDE OF HOLLOWAY ST.

SURVEY INFORMATION

PREPARED BY: COMMERCIAL SITE DESIGN
8312 CREEDMOOR ROAD
RALEIGH, NC 27613
PH: 919-848-6121 FAX: 919-848-3741
DATE OF SURVEY: 8/1/07 DATE OF MAP: 8/15/07

PLAN SCALE: 1" = 20

STREET ADDRESS
1010 NORTH MIAMI BOULEVARD

CITY	STATE
DURHAM	NORTH CAROLINA

COUNTY
DURHAM

TAX PARCEL NUMBER	LOCATION CODE NUMBER
0831-12-86-7423	32-0135
CSD FILENAME: MCD0708-LS	

LANDSCAPE NOTES:

1.) THE CONTRACTOR SHALL VERIFY LOCATION AND ELEVATION OF ALL UNDERGROUND UTILITIES. THE LOCATION OF ALL EXISTING UTILITIES ARE NOT NECESSARILY SHOWN ON THE PLANS AND WHERE SHOWN ARE ONLY APPROXIMATE. THE CONTRACTOR SHALL ON HIS INITIATIVE AND AT NO EXTRA COSTS HAVE LOCATED ALL UNDERGROUND LINES AND STRUCTURES AS NECESSARY. NO CLAIMS FOR DAMAGES OR EXTRA COMPENSATION SHALL ACCRUE TO THE CONTRACTOR FROM THE PRESENCE OF SUCH PIPE, OTHER OBSTRUCTIONS OR FROM ANY DELAY DUE TO REMOVAL OR REARRANGEMENT OF THE SAME. THE CONTRACTOR SHALL BE RESPONSIBLE FOR ANY DAMAGE TO UNDERGROUND STRUCTURES. THE CONTRACTOR IS RESPONSIBLE FOR CONTACTING ALL NON-SUBSCRIBING UTILITIES. THE CONTRACTOR(S) SHALL CONTACT NORTH CAROLINA "ONE CALL" AT 800-632-4949 FOR ASSISTANCE IN LOCATING EXISTING UTILITIES. CALL AT LEAST 48 HOURS PRIOR TO ANY DIGGING.

2.) ENTIRE SITE SHALL BE SODDED UNLESS SPECIFIED ON PLAN OR REQUESTED BY REGIONAL CONSTRUCTION MANAGER USE LOCALLY ADAPTED SOD.

3.) THE GENERAL CONTRACTOR SHALL LEAVE THIS SITE AT 6" FROM FINISHED GRADE. THE LANDSCAPE CONTRACTOR SHALL REVISE GRADES AT A MINIMUM TO ENSURE SMOOTH TRANSITIONS BETWEEN PLANTING BEDS AND LAWN AREAS.

4.) PLANT GUARANTEE: ALL PLANTS SHALL BE GUARANTEED TO LIVE FOR TWELVE MONTHS. THE GUARANTEE SHALL COMMENCE UPON FINAL ACCEPTANCE OF THE PROJECT. IF ANY PLANTS ARE DEAD OR IN AN UNHEALTHY CONDITION BEFORE FINAL ACCEPTANCE, THE LANDSCAPE CONTRACTOR SHALL REPLACE DEAD OR DYING PLANT MATERIAL AT HIS EXPENSE. THIS REPLACEMENT SHALL NOT BE CONSIDERED A GUARANTEED REPLACEMENT.

5.) ALL PLANTING SHALL BE PLACED WITHIN A MULCHED PLANTING BED.
ALL STRAPPING AND THE TOP 2/3 OF WIRE BASKETS MUST BE CUT AWAY AND REMOVED FROM ROOT BALLS PRIOR TO BACKFILLING PLANTING PIT. REMOVE TOP 1/3 OF BURLAP FROM ROOT BALL.

6.) ALL LANDSCAPE WORK SHALL BE IN ACCORDANCE WITH CURRENT CITY STANDARD DETAILS AND SPECIFICATIONS.

7.) ALL AREAS NOT MULCHED SHALL BE SEEDED OR SODDED IN ACCORDANCE WITH THE AREA SPECIFIED ON PLANS WITH GRASS SPECIES RECOMMENDED FOR REGION AS PRESCRIBED IN THE SEEDING SCHEDULE AS SHOWN ON THIS SHEET.

LANDSCAPE NOTES: (cont.)

8.) SITE LIGHTING SHALL NOT BE PLACED IN CONFLICT WITH PLANTED TREES.

9.) TREE PROTECTION FENCING TO BE PROVIDED AROUND TREE PRESERVATION AREAS IN ACCORDANCE WITH CITY STANDARDS.

10.) COORDINATE ALL WORK WITH SITE LAYOUT AND SITE GRADING, DRAINAGE & UTILITIES PLAN.

11.) MULCH ALL AREAS, THAT ARE NOT SEEDED OR SODDED, WITH SHREDDED HARDWOOD MULCH OR APPROVED EQUAL AS SPECIFIED TO A DEPTH OF 3"-4".

12.) THE SELECTION AND INSTALLATION OF PLANTS AND PLANTING METHODS SHALL CONFORM WITH THE STANDARDS OF THE AMERICAN ASSOCIATION OF NURSERYMEN OR THE CITY STANDARD DETAILS AND SPECIFICATIONS, WHICHEVER IS STRICTER.

13.) CONTRACTOR IS RESPONSIBLE FOR VERIFYING ALL QUANTITIES. DRAWINGS SHALL RULE OVER PLANT LISTS.

14.) SUBSTITUTIONS SHALL BE SUBMITTED TO LANDSCAPE ARCHITECT OR ENGINEER FOR APPROVAL, PRIOR TO INSTALLATION, SUBSTITUTIONS MAY REQUIRE ADDITIONAL APPROVAL BY THE GOVERNING JURISDICTION.

15.) ALL LANDSCAPING SOIL AND FILL SHALL BE FREE FROM WEEDS, REFUSE, AND DEBRIS AT ALL TIMES.

16.) TREES AND LARGE SHRUBS SHALL BE ADEQUATELY SUPPORTED, AS NECESSARY, USING STAKES AND GUYS. SUCH SUPPORTS SHALL BE DESIGNED SO AS TO PROTECT TREES AND SHRUBS FROM INJURY. TREES AND SHRUBS SHALL BE FASTENED TO THE SUPPORT WITH AN ACCEPTABLE COMMERCIAL TREE TIE OF PLASTIC OR HOSE COVERED WIRE.

17.) THE MAXIMUM GROWTH HEIGHT OF ANY LANDSCAPING WITHIN THE SIGHT TRIANGLE SHALL BE THREE (3) FEET IN HEIGHT OR AS REQUIRED AGENCIES HAVIING AUTHORITY OVER THE PROJECT.

18.) ALL LANDSCAPE AREAS SHALL BE ROUGH GRADED TO 6" BELOW TOP OF ALL WALKS AND CURBS. FINISH GRADING, LANDSCAPING AND SPRINKLER SYSTEMS ARE BY THE OWNER/OPERATOR.

REV	DATE	DESCRIPTION	BY	ISSUE/REF
1	04-05-11	PERMIT ISSUE	RCN	
2	07-27-11	REVISED PER DRB REVIEW #1	JCB	
3	11-28-11	REVISED PER DRB REVIEW #2	JWR	
4	02-15-12	MSPU REVIEW COMMENTS #1	JWR	
5	04-16-12	MSUP REVIEW COMMENTS #2 & DRB REVIEW #3	RCN	
6	06-20-12	REVERT TO ORIGINAL GRADING	RCN	
7	08-22-12	MSUP REVIEW COMMENTS #3	DHG	
8	10-09-12	MSUP REVIEW COMMENTS #5	RCN	
9	10-24-12	FINAL SITE PLAN REVIEW COMMENTS	RCN	
10	12-06-12	REMOVE FEE IN-LIEU SIDEWALK	JWR	

COMMERCIAL SITE DESIGN
8312 CREEDMOOR ROAD
RALEIGH, NORTH CAROLINA 27615
(919) 848-6121, FAX: (919) 848-3741
WWW.CSDESIGN.COM

McDonald's®

THESE PLANS AND SPECIFICATIONS ARE THE PROPERTY OF MCDONALD'S CORPORATION AND SHALL NOT BE REPRODUCED WITHOUT THEIR WRITTEN PERMISSION.

RALEIGH REGION
OFFICE: 4601 SIX FORKS ROAD - SUITE 200 - RALEIGH, N.C. 27609
ADDRESS:

PLAN APPROVAL

SIGNATURE (2 REQUIRED)	DATE
REGIONAL MGR.	
REGIONAL DEV. DIRECTOR	
REGIONAL CONSTRUCTION MGR.	
REGIONAL REAL ESTATE MGR.	

CO-SIGN SIGNATURES

AREA CONSTRUCTION MGR.	
CONTRACTOR	

STATUS	DATE	BY
FINAL	-	-
PLAN CHECKED	-	-
AS-BUILT	-	-

L-1
LANDSCAPE PLAN

X:\MCD - McDonalds\0700 Sites\0708 - Durham, NC @ Wellons Village 32-0135\CADM\CD0708-LS.dwg, 12/6/2012 3:58:05 PM, janer

** - SPECIFY COLOR

NOTE: ALL POLES ARE DRILLED

FIXTURE TYPE:	SYMBOL	QUANTITY	CONFIG	QUANTITY	MOUNTING HEIGHT	LUMENS	POLE TYPE: *	QUANTITY
RSB/RCS-320PMH-III-**-MT	●■	10	SGL	10	25'	31,000	SSP-22-** (5")	10
RWSC-100PMH-UD-**120V	◓	10			10'	9,000		

* POLES SPECIFIED ON THIS DRAWING ARE RATED FOR AN 80 MPH WIND LOAD. FOR AREAS WHERE THE WIND LOAD CRITERIA EXCEEDS 80 MPH, PLEASE CONSULT FACTORY FOR PROPER POLE SPECIFICATION AND MODEL NUMBER.

THIS LIGHTING PATTERN REPRESENTS ILLUMINATION LEVELS CALULATED FROM LABORATORY DATA. TAKEN UNDER CONTROLLED CONDITIONS IN ACCORDANCE WITH ILLUMINATING ENGINEERING SOCIETY APPROVED METHODS. ACTUAL PERFORMANCE OF ANY MANUFACTURER'S LUMINAIRES MAY VARY DUE TO VARIATION IN ELECTRICAL VOLTAGE, TOLERANCE IN LAMPS, AND OTHER VARIABLE FIELD CONDITIONS.

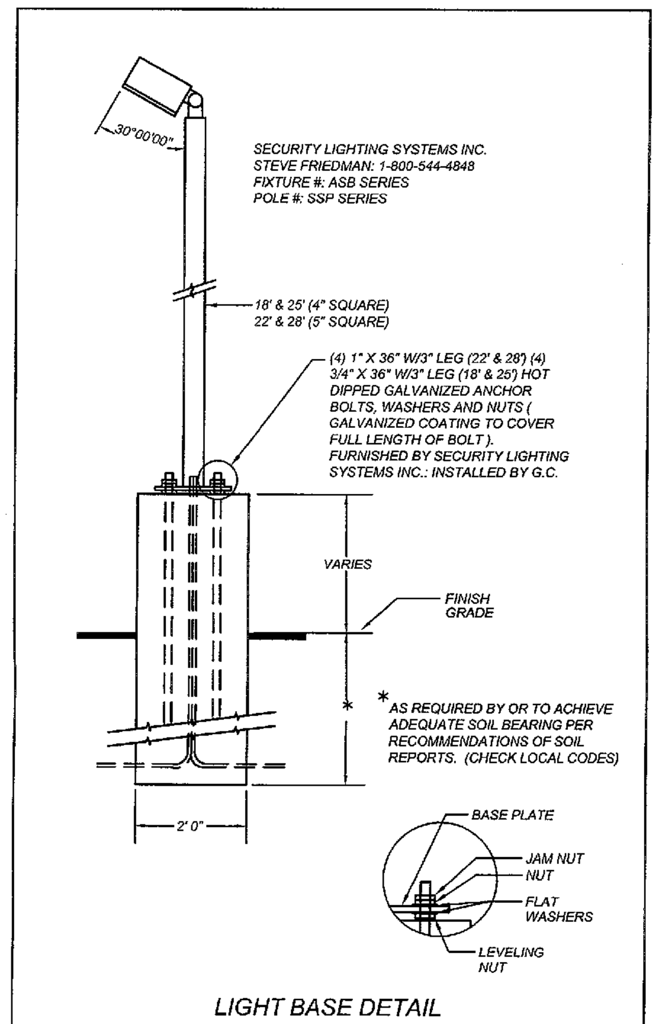

LIGHT BASE DETAIL

(NOT TO SCALE)

RSB-RCS/L SERIES

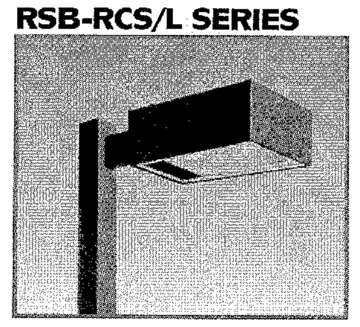

The RSB-RCS/L Series rectangular shoebox is offered in a variety of lighting distributions with sharp cutoff to meet the challenging demands of today's site lighting projects.

Fixture Specifications

- One-piece formed aluminum housing
- Hydroformed aluminum reflector
- Die cast zinc latches permit tool-free entry
- High power factor ballast with -20°F starting
- Consult factory for external glare shield options
- Lamp and arm included
- Flat tempered glass lens
- Luminaire finished in weatherproof powder-coat paint
- Available with photocell and polycarbonate shield
- Rotatable optics (RCL only)

	A	B	C	D	E
RSB-RCS					
15.25"	22.5"	8.0"	5.0"	10.0"	1.7
RSB-RCL					
22.7"	30.6"	10.7"	5.0"	10.0"	3.0

ORDERING INFORMATION

SAMPLE CATALOG NUMBER

RSB-RCX XXXXXXX XX X XX

Series / Wattage/Source / Finish / Distribution / Voltage

Series	
RSB-RCS	RSB Series - Small
RSB-RCL	RSB Series - Large

Wattage/Source	
100MH	100 watt metal halide (RCS)
175MH	175 watt metal halide (RCS)
250MH	250 watt metal halide (RCS)
400MH	400 watt metal halide (RCS/L)
1000MH	1000 watt metal halide (RCL)
100HPS	100 watt high pressure sodium (RCS)
150HPS	150 watt high pressure sodium (RCS)
250HPS	250 watt high pressure sodium (RCS)
400HPS	400 watt high pressure sodium (RCS/L)
1000HPS	1000 watt high pressure sodium (RCL)

Finish	
DB	Dark Bronze
BK	Black
WH	White

Distribution	
3	Type III
4	Type IV
5	Type V (square)

Voltage	
MT	Multi-tap ballast (120, 208, 240, 277)
48	480 volt

Performance Designed Lighting Products

1085 Johnson Drive • Buffalo Grove, IL 60089 • TOLL-FREE: 800-544-4848 • PHONE: 847-279-0627 • FAX: 847-279-0642

www.securitylighting.com

SQUARE STRAIGHT STEEL POLES

Specifications

SSP SERIES IN STOCK POLES

- Square straight steel shaft
- One-piece construction
- 2⅜" OD tenons, or factory-drilled side mount
- Ground lug standard (3/8" 16 thread)
- Steel base plate
- Two-piece base cover
- Four L-shaped fully galvanized anchor bolts with nuts and washers, metal template
- Finished in weatherproof powder-coat paint
- Gasketed hand hole standard

ORDERING INFORMATION

11 GAUGE										
SSP-4118-XXX-XX	18	11.5	6	3	4"	12"	3/4"	10.5"	8.5-11"	4"	147
SSP-4125-XXX-XX	25	5	1.5	–	4"	12"	3/4"	10.5"	8.5-11"	4"	178
SSP-5125-XXX-XX	25	10.5	4	–	5"	12"	1"	10.5"	10-13.5"	4"	231
7 GAUGE										
SSP-4725-XXX-XX	25	10	4.5	1.4	4"	12"	3/4"	10.5"	8.5-11"	4"	246
SSP-5722-XXX-XX	22	20	11	6	5"	12"	1"	10.5"	10-13.5"	4"	268
SSP-5728-XXX-XX	28	13.4	7.4	3	5"	12"	1"	10.5"	10-13.5"	4"	340
SSP-5730-XXX-XX	30	12	4.5	–	5"	12"	1"	10.5"	10-13.5"	4"	398

BOLT TEMPLATE

4" Square Pole / 5" Square Pole

CATALOG LOGIC

SAMPLE CATALOG NUMBER

SSP X XX X X X XX

Series / Shaft Size Square / Nominal Height / Top Type / Mounting Arrangement / Fixture Type / Finish

Series	
SSP	Square Straight Steel

Shaft Size Square	
41	4.0", 11 ga.
47	4.0", 7 ga.
51	5.0", 11 ga.
57	5.0", 7 ga.

Nominal Pole Height: See ordering information above

Top Type	
1	2⅜" OD Tenon
5	Removable Tenon
6	Side mount

Mounting Arrangement	
A	One Fixture
B	Two Fixtures at 180°
D	Two Fixtures at 90°
E	Three Fixtures at 60°
G	Four Fixtures at 90°
P	Tenons only

Fixture Type	
0	None, tenon only
2	ASB-F, RSB-RCS/RCL, WL, MXC, SL
4	RSB-ARS, GF, RS, ARS RD

Finish	
AD	Almond
DB	Dark Bronze
BK	Black
WH	White
PL	Platinum

ACCESSORY: TENON TOP MOUNTING BRACKET

TTF-10	Single
TTF-20	Twin 90°
TTF-28	Twin 180°
TTF-29	Triple 90°
TTF-30	Triple 120°
TTF-49	Quad 90°

Performance Designed Lighting Products

1085 Johnson Drive • Buffalo Grove, IL 60089 • TOLL-FREE: 800-544-4848 • PHONE: 847-279-0627 • FAX: 847-279-0642

www.securitylighting.com

RADIUS WALL SCONCE

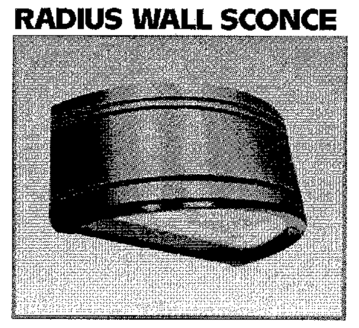

The RWSC Series radius wall sconce offers maximum versatility with multiple light sources and finishes. The available combination of uplight/downlight washes the building facade while the radial soft form housing will complement similar architectural design elements.

Fixture Specifications

FEATURES

- Durable cast aluminum housing
- Available in various lighting distributions for maximum versatility
- Integrated design eliminates high angle brightness
- Luminaire finished in weatherproof powder-coat paint
- Completely sealed flat tempered glass lenses suitable for use in wet location
- Ships complete with lamp

DIMENSIONS

A	B	C
7.25"	18.0"	9.0"

ORDERING INFORMATION

SAMPLE CATALOG NUMBER

RWSC XXXXXX XX XX XXX

Series / Wattage/Source / Distribution / Finish / Voltage

Series	
RWSC	Radius Wall Sconce

Wattage/Source	
70PMH	70 watt pulse start metal halide
100PMH	100 watt pulse start metal halide
150PMH	150 watt pulse start metal halide
70HPS	70 watt high pressure sodium
100HPS	100 watt high pressure sodium
150HPS	150 watt high pressure sodium
26QF	26 watt quad tube fluorescent
32TRF	32 watt triple tube fluorescent
42TRF	42 watt triple tube fluorescent
226QF	2x26 watt quad tube fluorescent
232TRF	2x32 watt triple tube fluorescent
242TRF	2x42 watt triple tube fluorescent
50LED	50 watt LED

Distribution	
UD	Up/Downlight
WD	Downlight only (wide distribution) - standard
FT	Downlight only (forward throw)

Finish	
DB	Dark Bronze
BK	Black
WH	White
PS	Platinum Silver

Voltage	
120	120 volt
277	277 volt
MT	Multi-Tap

Options	
QSL	Quartz re-strike with lamp
F	Single fusing
FF	Double fusing
EM12	1 MR8/MR16 two pin socket for 12v power (by others), 35w max, 35w MR11 lamp included
2EM12	2 MR8/MR16 two pin sockets for 12v power (by others) 35w max 35w MR11 lamp included

Accessories	
EM	Remote emergency ballast (fluorescent only)

Performance Designed Lighting Products

1085 Johnson Drive • Buffalo Grove, IL 60089 • TOLL-FREE: 800-544-4848 • PHONE: 847-279-0627 • FAX: 847-279-0642

www.securitylighting.com

CITY OF DURHAM NOTES:

1. SITE LIGHTING NOTE: MEASURES SHALL BE PROVIDED TO PREVENT LIGHT SPILLOVER ONTO ADJACENT PROPERTIES AND GLARE TOWARD MOTOR VEHICLE OPERATORS. EXTERIOR LIGHTS SHALL BE SHIELDED SO THAT THEY DO NOT CAST DIRECT LIGHT BEYOND THE PROPERTY LINE. IN ACCORDANCE WITH THESE STANDARDS:
   A. THE MAXIMUM ILLUMINATION AT THE EDGE OF THE PROPERTY LINE ADJACENT TO RESIDENTIAL ZONING IS ½ FOOT CANDLES.
   B. THE MAXIMUM ILLUMINATION AT THE EDGE OF THE PROPERTY LINE ADJACENT TO NONRESIDENTIAL ZONING IS 5 FOOT CANDLES.
   C. THE MAXIMUM ILLUMINATION AT THE EDGE OF THE PROPERTY LINE ADJACENT TO A STREET IS 5 FOOT CANDLES.
   D. THE MAXIMUM HEIGHT FOR DIRECTIONAL LIGHTING FIXTURES, WHICH ARE DEFINED AS FIXTURES DESIGNED TO INSURE THAT NO LIGHT IS EMITTED ABOVE A HORIZONTAL LINE PARALLEL TON THE GROUND, SHALL BE 25 FEET.

   THE MAXIMUM HEIGHT FOR NON-DIRECTIONAL LIGHTING FIXTURES, WHICH ARE DEFINED AS FIXTURES DESIGNED TO ALLOW LIGHT TO BE EMITTED ABOVE A HORIZONTAL LINE PARALLEL TO THE GROUND, SHALL BE 12 FEET. THIS MUST NE VERIFIED BY FIELD SURVEY (BY USE OF PHOTOMETRIC SURVEY) PRIOR TO THE CERTIFICATE OF COMPLIANCE BEING ISSUED. METHODS TO ACCOMPLISH THIS MAY INCLUDE, BUT NOT BE LIMITED TO, HORIZONTAL LAMPS, SHIELDING OF LAMPS, REDUCTION IN THE NUMBER OF FIXTURES, REDUCTION OF WATTAGE OF BULBS, ETC. ALL OF THIS INFORMATION, INCLUDING DETAILS, WILL BE REQUIRED ON BUILDING PLANS PRIOR TO ISSUANCE OF BUILDING PERMIT.
2. PARKING LOT SHALL BE ILLUMINATED IN ACCORDANCE WITH SECTION 7.4 OF THE UDO AS CONFIRMED BY AN AS-BUILT LIGHTING SURVEY.

PRELIMINARY DESIGN - NOT RELEASED FOR CONSTRUCTION

UNLESS OTHERWISE SPECIFIED, ALL DIMENSIONS ARE IN INCHES				
TOLERANCES NOT OTHERWISE SPECIFIED				
DECIMAL .XX .015 .XXX .005	FRACTIONAL	ANGULAR		
SCALE 1" = 20' 0"		DATE	NEXT ASSEMBLY	REF. DRWGS.
DRAWN BY JM	8/1/11			
CHECKED BY				
APPROVED BY				
APPROVED BY		FINISH		
APPROVED BY				
SHOP ORDER		MATERIAL		
PROJECT NO.				

SECURITY LIGHTING SYSTEMS

Performance Designed Lighting Products

1085 Johnson Dr., Buffalo Grove, Illinois 60089

1-800-544-4848

POINT-BY-POINT FOOTCANDLE PLOT FOR

– McDONALD'S –

WELLONS VILLAGE

DURHAM, NC

DRAWING NUMBER 1PCP 23437A

NOTES:

1. THE FOOTCANDLE LEVELS AS SHOWN ARE BASED ON THE FOLLOWING CRITERIA. ANY SUBSTITUTIONS IN SPECIFIED FIXTURES OR CHANGES TO LAYOUT WILL AFFECT LIGHTING LEVELS SHOWN AND WILL NOT BE THE RESPONSIBILITY OF SECURITY LIGHTING.
2. THE CONTRIBUTION OF THE METAL HALIDE SOFFIT / BUILDING LIGHTING IS NOT REFLECTED ON THIS DRAWING.
3. DISTANCE BETWEEN READINGS 10'
4. FINAL ADJUSTMENTS TO AIMING ANGLE/DIRECTION OF FIXTURES MAY BE REQUIRED TO ELIMINATE LIGHT TRESPASS OR GLARE ONTO ADJOINING PROPERTIES OR ROADWAYS.
5. FOOTCANDLE LEVELS SHOWN ARE MAINTAINED. MAINTENANCE-FACTOR USED ON THIS DRAWING IS .75

NOTE TO CONTRACTOR

THE LIGHT POLE AND BASES ARE NOT STANDARD SIZES GIVEN ADJUSTMENTS NECESSARY FOR FLOOD REGULATIONS. SINCE POLE HEIGHTS VARY CUSTOM DESIGNS ARE NECESSARY.

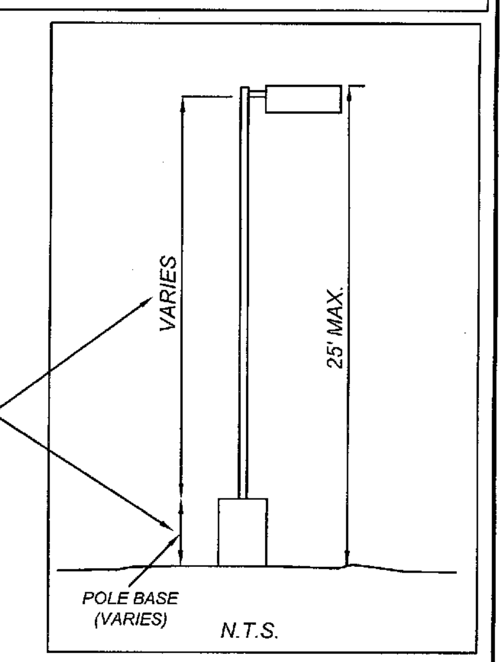

PAVED SURFACE READINGS

Average	4.0
Maximum	8.8
Minimum	1.0
Avg:Min	4.03
Max:Min	8.80

PROPERTY LINE READINGS

Average	2.6
Maximum	5.0
Minimum	0.4
Avg:Min	6.56
Max:Min	12.50

WALKWAYS AND ENTRANCES

Average	4.1
Maximum	9.0
Minimum	0.8
Avg:Min	5.15
Max:Min	11.25

PARKING INFORMATION (ON-SITE)

TOTAL SPACES						
30	28 SPACES	9'	X	20'	@ 60°	
	2 SPACES	8'	X	20'	@ 60°	

UTILITY INFORMATION

	SIZE	TYPE	LOCATION
SANITARY SEWER	12"	PUBLIC	REAR OF SITE
WATER	6" & 12"	PUBLIC	ALONG STREETS
STORM SEWER	6'	BOX CULVERT	REAR OF SITE
ELECTRIC		OVERHEAD	ALONG STREETS
GAS		PUBLIC	OTHER SIDE OF HOLLOWAY ST.

SURVEY INFORMATION

PREPARED BY: COMMERCIAL SITE DESIGN
8312 CREEDMOOR ROAD
RALEIGH, NC 27613
PH: 919-848-6121 FAX: 919-848-3741
DATE OF SURVEY: 8/1/07 DATE OF MAP: 8/15/07

PLAN SCALE: 1" = 20

STREET ADDRESS

1010 NORTH MIAMI BOULEVARD

CITY	STATE
DURHAM	NORTH CAROLINA

COUNTY

DURHAM

TAX PARCEL NUMBER	LOCATION CODE NUMBER
0831-12-86-7423	32-0135
CSD FILENAME: MCD0708-LI	

D.B.4577, PG. 326

COMMERCIAL SITE DESIGN, PLLC P-0266 RALEIGH, NORTH CAROLINA

12/7/12

REV	DATE	DESCRIPTION	BY	ISSUE/REF
1	04-05-11	PERMIT ISSUE	RCN	
2	07-27-11	REVISED PER DRB REVIEW #1	JCB	
3	11-28-11	REVISED PER DRB REVIEW #2	JWR	
4	02-15-12	MSPU REVIEW COMMENTS #1	JWR	
5	04-16-12	MSUP REVIEW COMMENTS #2 & DRB REVIEW #3	RCN	
6	06-20-12	REVERT TO ORIGINAL GRADING	RCN	
7	08-22-12	MSUP REVIEW COMMENTS #3	DHG	
8	10-09-12	MSUP REVIEW COMMENTS #5	RCN	
9	10-24-12	FINAL SITE PLAN REVIEW COMMENTS	RCN	
10	12-06-12	REMOVE FEE IN-LIEU SIDEWALK	JWR	

COMMERCIAL SITE DESIGN

8312 CREEDMOOR ROAD
RALEIGH, NORTH CAROLINA 27613
(919) 848-6121, FAX: (919) 848-3741
WWW.CSITEDESIGN.COM

McDonald's

THESE PLANS AND SPECIFICATIONS ARE THE PROPERTY OF McDONALD'S CORPORATION AND SHALL NOT BE REPRODUCED WITHOUT THEIR WRITTEN PERMISSION.

OFFICE	RALEIGH REGION
ADDRESS	4601 SIX FORKS ROAD - SUITE 200 - RALEIGH, N.C. 27609

PLAN APPROVAL

	SIGNATURE (2 REQUIRED)	DATE
REGIONAL MGR.		
REGIONAL DEV. DIRECTOR		
REGIONAL CONSTRUCTION MGR.		
REGIONAL REAL ESTATE MGR.		
CO-SIGN SIGNATURES		
AREA CONSTRUCTION MGR.		
CONTRACTOR		

STATUS	DATE	BY
FINAL	-	-
PLAN CHECKED	-	-
AS-BUILT	-	-

L-2

LIGHTING PLAN

X:\MCD - McDonalds\0700 Sites\0708 - Durham, NC @ Wellons Village 32-0135\CAD\MCD0708-LI.dwg, 12/6/2012 3:58:40 PM, janer

GENERAL NOTES

1. THE CONTRACTOR SHALL BE RESPONSIBLE FOR BRACING ALL WORK DURING CONSTRUCTION.
2. FOOTINGS ARE DESIGNED FOR AN ALLOWABLE SOIL PRESSURE OF 1500 PSF.
3. CONCRETE SHALL HAVE A MINIMUM ULTIMATE 28-DAY COMPRESSIVE STRENGTH OF 2500 PSI, EXCEPT SLAB ON GRADE SHALL BE 4000 PSI WITH 4" MAXIMUM SLUMP.
4. ALL STRUCTURAL STEEL SHALL BE ASTM A36.
5. ALL BOLTS SHALL BE ASTM A325, EXCEPT ANCHOR BOLTS MAY BE ASTM A307.
6. ALL WELDING SHALL BE DONE ACCORDING TO AMERICAN WELDING SOCIETY (A.W.S.) SPECIFICATIONS BY A.W.S. CERTIFIED WELDERS.
7. AIR ENTRAINING AGENTS SHALL BE USED TO PRODUCE 3% TO 6% AIR BY VOLUME IN ALL CONCRETE.
8. WOOD STRENGTH Fb = 1,200 PSI, E = 1,600 KSI
9. MASONRY (CMU) STRENGTH (f'm) 1350 PSI
10. GROUT SHALL BE NON-SHRINK WITH A 28-DAY STRENGTH OF 2000 PSI. EXPOSED GROUT SHALL BE NON-STAINING.
11. ALL BAR REINFORCEMENT STEEL SHALL BE ASTM A615 GRADE 60, EXCEPT GRADE 40 MAY BE USED FOR TIES AND STIRRUPS.
12. WELDED WIRE FABRIC (W.W.F.) SHALL CONFORM TO ASTM C-185. ALTERNATIVE REINFORCEMENT TO W.W.F FOR SLAB IS A POCY PROPYLENE FIBER PRODUCT, FIBERMESH 150 OR EQUAL.
13. TYPE "S" MORTAR SHALL BE USED U.N.O.
14. DETAILS WHICH ARE NOT SHOWN SHALL BE ACCORDING TO SPECIFICATION AND CODE OF THE AMERICAN INSTITUTE OF STEEL CONSTRUCTION, THE AMERICAN CONCRETE INSTITUTE, THE BRICK INSTITUTE OF AMERICA, THE STANDARD BUILDING CODE, AND ANY LOCAL ORDINANCES.
15. REINFORCED MASONRY GROUT (RMG) FOR FILLING CELLS IN CONCRETE BLOCK, SHALL CONFORM TO STANDARD SPECIFICATIONS FOR GROUT FOR REINFORCED MASONRY, ASTM C-476, WITH A SLUMP OF BETWEEN 9" AND 11". IT SHALL BE PLACED IN LIFTS OF NOT MORE THAN 4'-0", AND SHALL BE PLACED NO LATER THAN 2 1/2 HOURS AFTER WATER HAS BEEN FIRST ADDED.
16. LOAD BEARING CONCRETE MASONRY SHALL CONFORM TO ASTM C90 GRADE N2 FOR EXTERIOR WALLS AND WALLS BELOW GRADE.
17. THESE DRAWINGS SHALL NOT BE SCALED.
18. EXTERIOR WALLS AND DOOR OF THE STORAGE BUILDING SHALL MATCH THE MAIN BUILDING.
19. THE STORAGE BUILDING'S CONCRETE FLOOR SHALL BE SEALED.
20. ALL WORK TO BE COMPLETED ACCORDING TO ALL APPLICABLE CODES AND ORDINANCES.
21. CONTRACTOR TO VERIFY EXISTING & NEW CONDITIONS AND DIMENSIONS PRIOR TO CONSTRUCTION.
22. ALL MATERIALS AND ITEMS TO BE INSTALLED ACCORDING TO THE MANUFACTURERS RECOMMENDATIONS AND SPECIFICATIONS AND SHALL MATCH EXISTING MATERIALS AND COLORS.
23. CONTRACTOR TO USE CIRCUIT ALLOTTED FOR STORAGE BUILDING AND RE-USE UNDERGROUND WIRING CONDUIT IF DEEMED APPROPRIATE.
24. SEE THE LATEST EDITION OF THE "PROJECT MANUAL FOR THE McDONALD'S STANDARD BUILDING PROGRAM" FOR FURTHER INFORMATION AND SPECIFICATIONS.
25. WATERPROOF BLOCK INTERIOR SIDE OF BLOCK AND MORTAR
26. SEAL TOP OF BLOCK AND BRICK OF TRASH PORTION WITH ROLOCK CAP.

BUILDING DATA: STORAGE BUILDING

OCCUPANCY:	S-1, STORAGE (DRY GOODS IN CARDBOARD BOXES) UNCONDITIONED
CONSTRUCTION TYPE:	VI (UNPROTECTED/UNSPRINKLED)
STORAGE BUILDING AREA:	VARIES
STORAGE BUILDING STORIES:	1 STORY (1 STORY ALLOWED)
STORAGE BUILDING HEIGHT:	< 9'-0"
EXTERIOR WALLS:	6" LIGHTWEIGHT CONCRETE BLOCK WITH 4" BIRCK VANEER ACI 216, CHAPTER 3: EQUIVALENT THICKNESS IS EQUAL TO 1 HOUR. PER TABLE 600, WALLS MORE THAN 3' CLEAR FROM PROPERTY
LIFE SAFETY SYSTEM:	LINE = 0 HOUR RATING
SPRINKLER:	NO
EMERGENCY LIGHTING AND EXIT SIGNS:	NO
FIRE ALARM AND SMOKE DETECTION SYSTEMS:	NO
PANIC HARDWARE:	NO

DESIGN CONFORMS TO THE FOLLOWING CODES	
N.C.S.B.C	2009
I.B.C.	2006
I.B.C.	2009
V.U.S.B.C.	2006

MARK	DESCRIPTION
4	4" STRIP FLUORESCENT 1-32 WATT SURFACE MOUNTED EXPANDED METAL GUARD MOUNTED TO CEILING (SEE PLAN FOR NUMBER REQUIRED)
1	4'-0" x 7'-0" x 1 3/4" 16GA. HOLLOW METAL DOOR & FRAME ADD HAGER ROTON HINGE & LCN DOOR CLOSER BUCKS LOCKSET

NOTES

1. EXTERIOR FINISH OF ENCLOSURE TO BE BRICK TO MATCH THE VENEER BRICK USED ON THE BUILDING.
2. IF EXTERIOR FINISH OF BUILDING IS NOT BRICK, CONSULT PROJECT A.C.M.

MAXIMUM DESIGN CATEGORIES	
LOAD TYPE	DESIGN CAPACITY
WIND	140 MPH - 3 SEC GUST
LIVE (SNOW)	20 PSF
SIESMIC	CAT I, CLASS D S_S = 50% S_1 = 10%

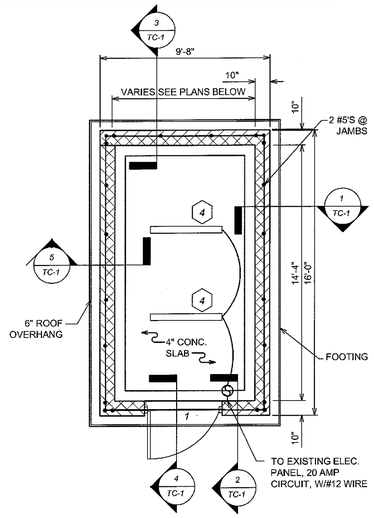

STORAGE BUILDING PLAN VIEW
SCALE: 1/4" = 1'-0"

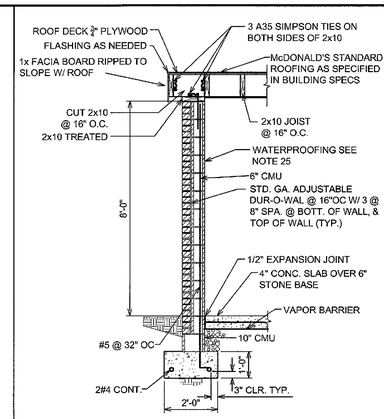

EXTERIOR WALL
SCALE: 3/8" = 1'-0"

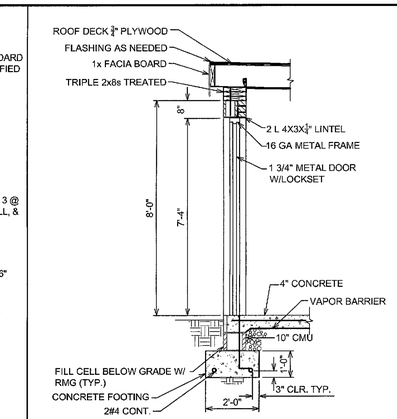

DOOR SECTION
SCALE: 3/8" = 1'-0"

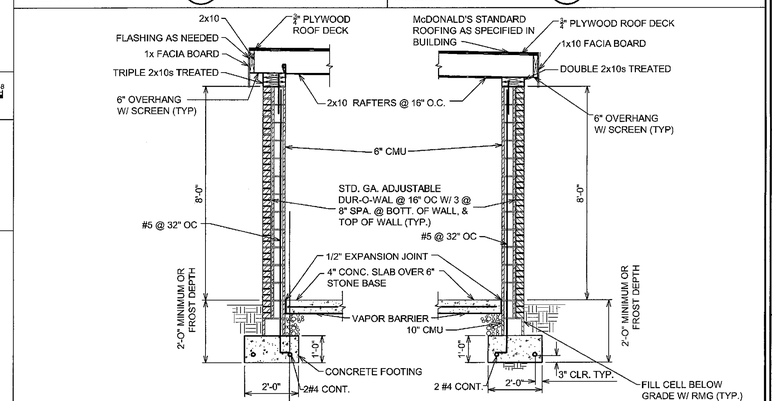

EXTERIOR WALL SECTIONS
SCALE: 3/8" = 1'-0"

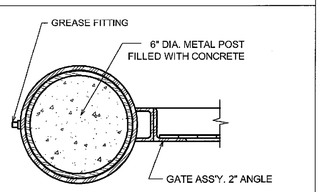

GATE HINGE
SCALE: 3" = 1'-0"

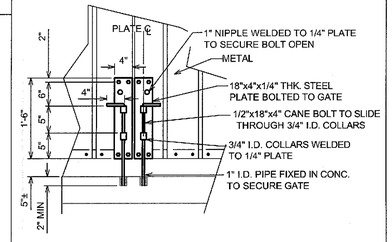

CANE BOLT
SCALE: 3/4" = 1'-0"

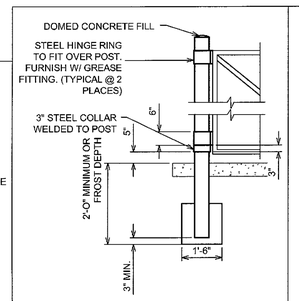

HINGE POST
SCALE: 3/8" = 1'-0"

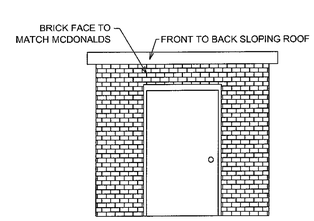

FRONT ELEVATION
SCALE: 1/4" = 1'-0"

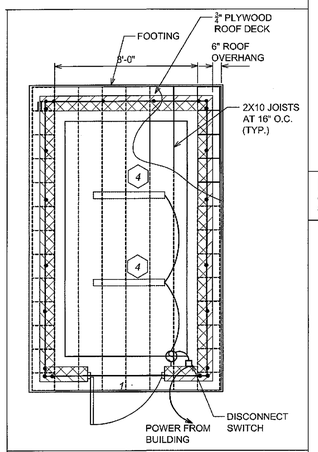

8' FRAMING PLAN
SCALE: 1/4" = 1'-0"

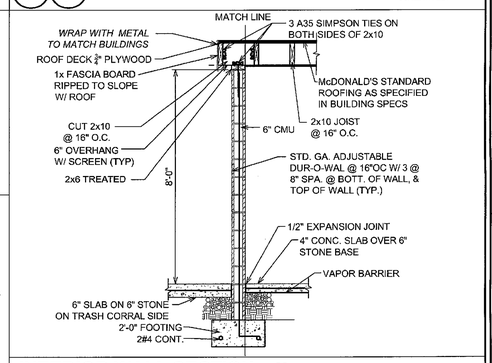

INTERIOR WALL SECTION
SCALE: 3/8" = 1'-0"

REV	DATE	DESCRIPTION	BY	ISSUE/REF
1	04-05-11	PERMIT ISSUE	RCN	
2	07-27-11	REVISED PER DRB REVIEW #1	JCB	
3	11-28-11	REVISED PER DRB REVIEW #2	JWR	
4	02-15-12	MSPU REVIEW COMMENTS #1	JWR	
5	04-16-12	MSUP REVIEW COMMENTS #2 & DRB REVIEW #3	RCN	
6	06-20-12	REVERT TO ORIGINAL GRADING	RCN	
7	08-08-12	MSUP REVIEW COMMENTS #3	DHG	
8	10-09-12	MSUP REVIEW COMMENTS #5	RCN	
9	10-24-12	FINAL SITE PLAN REVIEW COMMENTS	RCN	

COMMERCIAL SITE DESIGN
(919) 848-4321, F-X: (919) 848-5741
WWW.CSITEDESIGN.COM
8312 CREEDMOOR ROAD
RALEIGH, NORTH CAROLINA 27603

McDonald's®
THESE PLANS AND SPECIFICATIONS ARE THE PROPERTY OF McDONALD'S CORPORATION AND SHALL NOT BE REPRODUCED WITHOUT THEIR WRITTEN PERMISSION.

RALEIGH REGION
OFFICE: 4601 SIX FORKS ROAD - SUITE 200 - RALEIGH, N.C. 27609
ADDRESS:

PLAN APPROVAL

SIGNATURE (2 REQUIRED)	DATE
REGIONAL MGR.	
REGIONAL DEV. DIRECTOR	
REGIONAL CONSTRUCTION MGR.	
REGIONAL REAL ESTATE MGR.	
CO-SIGN SIGNATURES	
AREA CONSTRUCTION MGR.	
CONTRACTOR	

STATUS	DATE	BY
FINAL	-	-
PLAN CHECKED	-	-
AS-BUILT	-	-

P-0286

TC-1
STORAGE BUILDING AND TRASH CORRAL GATE DETAILS

K:\MCD - McDonalds\0700 Sites\0708 - Durham, NC @ Wellons Village 32-0135\CADM\CD0708-TC.dwg, 10/25/2012 8:55:14 AM, dhrison

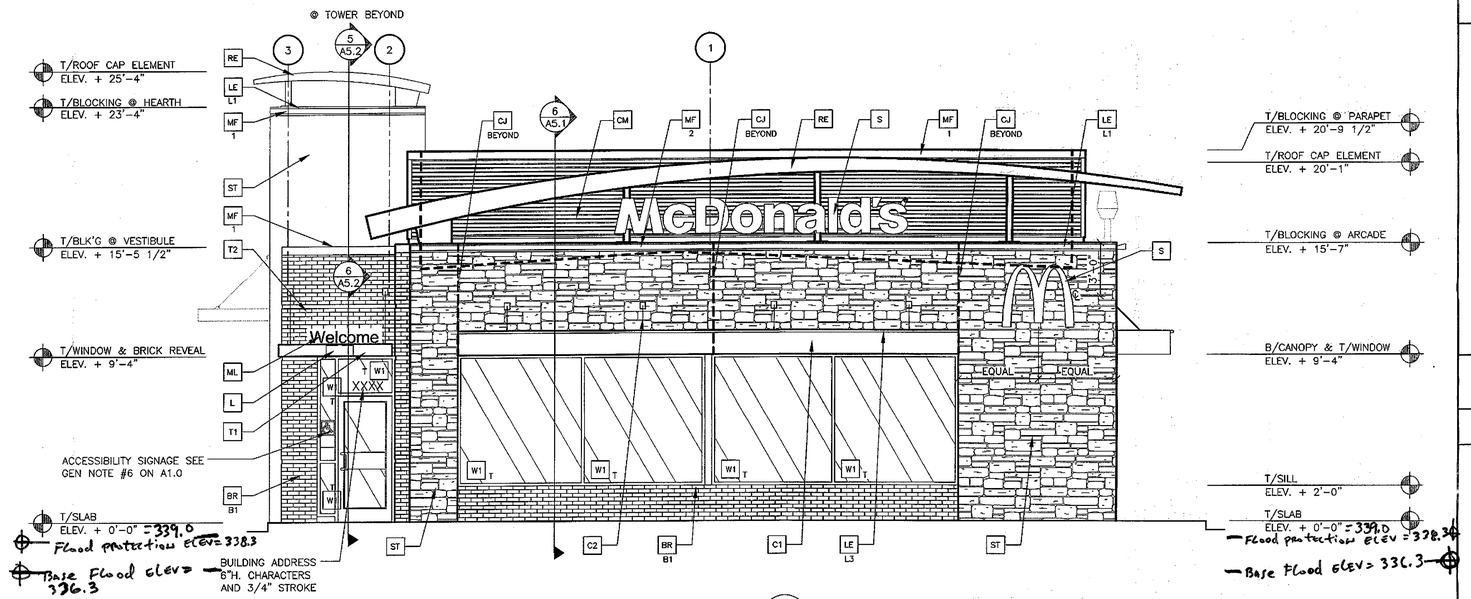

1 A2.0 FRONT ELEVATION
1/4" = 1'-0"

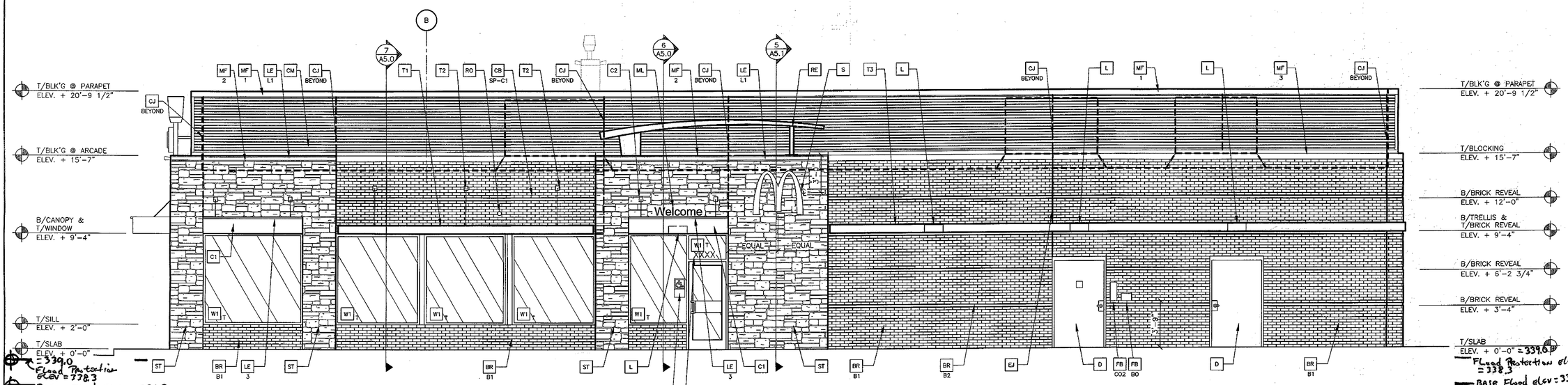

2 A2.0 NON DRIVE-THRU ELEVATION
1/4" = 1'-0"

KEY NOTES:

- BR — FACEBRICK
  - B1 — COLOR:
    - B1 = "RUBIGO RED VELOUR" BY BELDEN OR EQUAL
    - B2 = "MODULAR MIDLAND BLEND A" BY BELDEN OR EQUAL
- MF — METAL FASCIA – COLOR TO MATCH CORRUGATED METAL PANEL – SEE 1/A5.0
  - 1 — TYPE:
    - 1 = PRE-FAB ANCHOR-TITE FASCIA
    - 2 = PRE-FAB CUSTOM ARCADE FASCIA
    - 3 = PRE-FAB MASONRY CAP FASCIA
- C1 — ALUMINUM CANOPY SYSTEM (COLOR: YELLOW)
- C2 — ALUMINUM CANOPY TIE-BACK SYSTEM
- CJ — CONTROL JOINT, SEE DETAIL 7/A4.1
- CM — CORRUGATED METAL PANEL, COLOR = CITYSCAPE BY METAL ERA OVER SMOOTH FACE CONCRETE BLOCK – SEE 1A/A5.0
- D — HOLLOW METAL DOOR – PAINT TO MATCH COLOR OF SURROUNDING MATERIAL
- E — EXTERIOR INSULATION FINISH SYSTEM (E.I.F.S.) COLOR = BENJAMIN MOORE 2122-70 SNOW WHITE
- EJ — EXPANSION JOINT, SEE DETAIL 7/A4.1 (SIM.)
- FB — CO2
  - CO2= BULK CO2 FILL BOX (EQPM SCHEDULE ITEM 49.00)
  - BO= BULK OIL FILL BOX (EQPM SCHEDULE ITEM 700.18) – CONFIRM USE WITH MCD PROJECT MANAGER
- L — LIGHT FIXTURE (WALL SCONCE) – SEE ELECTRICAL
- LE — ACCENT LIGHTING – SEE ELECTRICAL
  - L1 — LED LIGHT:
    - L1 = UP AND DOWN FIXTURE
    - L2 = DOWN ONLY FIXTURE
    - L3 = INTEGRAL CANOPY FIXTURE
- ML — METAL LETTERING – BY OTHERS
- PB — PIPE BOLLARD – PAINTED YELLOW
- PY — (RMHC) COIN COLLECTOR
- RE — ROOF CAP ELEMENT BY OTHERS
- RO — ROOF DRAIN OVERFLOW PIPE PAINT TO MATCH SURROUNDING MATERIAL
- S — McDONALD'S SIGNAGE BY OTHERS – UNDER SEPARATE PERMIT.
- ST — CULTURED STONE: OWENS CORNING COBBLEFIELD COLOR = TEXAS CREME
- T1 — ALUMINUM TRELLIS
- T2 — TRELLIS TIE-BACK
- T3 — ALUMINUM TRELLIS 2" x 8" WALL FASCIA SYSTEM – REFER TO SIM. DETAIL 3/A5.1
- W1 — EXTERIOR WINDOW ASSEMBLY – SEE A5.0
  - T = TEMPERED GLASS
- W2 — DRIVE-THRU WINDOW BY READY ACCESS CONFIRM MODEL, OPTIONS, AND SIZE WITH MCD PROJECT MANAGER OPTIONS INCLUDE: TRANSOM (SHOWN)
  - XX — SLIDE DIRECTION: RL = RIGHT TO LEFT; LR = LEFT TO RIGHT

REV	DATE	DESCRIPTION	BY

PREPARED BY:

PREPARED FOR: McDonald's USA, LLC

©2011 McDonald's USA, LLC
These drawings and specifications are the confidential and proprietary property of McDonald's USA, LLC and shall not be copied or reproduced without written authorization. The contract documents were prepared for use on a single site by McDonald's USA, LLC. Use of these drawings for reference or example on another project requires the independent review and approval of McDonald's USA, LLC. Modifications to the contract documents for reuse on another project is not authorized.

DRAWN BY	STD ISSUE DATE
SPB	JULY 2011
REVIEWED BY	DATE ISSUED
MR	01 AUG 2011

TITLE: 2011 STANDARD BUILDING 4587-MASONRY/STEEL +5'F +5'R

DESCRIPTION: 8" MASONRY LOAD BEARING WALLS; STEEL TRUSS ROOF FRAMING; CULTURED STONE EXTERIOR FINISH ARCADE/ENTRY

SITE ID: 032-0135 | SITE ADDRESS: 1010 N MIAMI BLVD – WELLONS VILLAGE | DURHAM, NC

SHEET NO. 032-0135-01.1 A2.0 ELEVATIONS

C:\USERS\MC24973\DOCUMENTS\2011 – RALEIGH STYLE\45-87 MS +5 +5\A-ELEV.DWG 08-01-2011 07:41

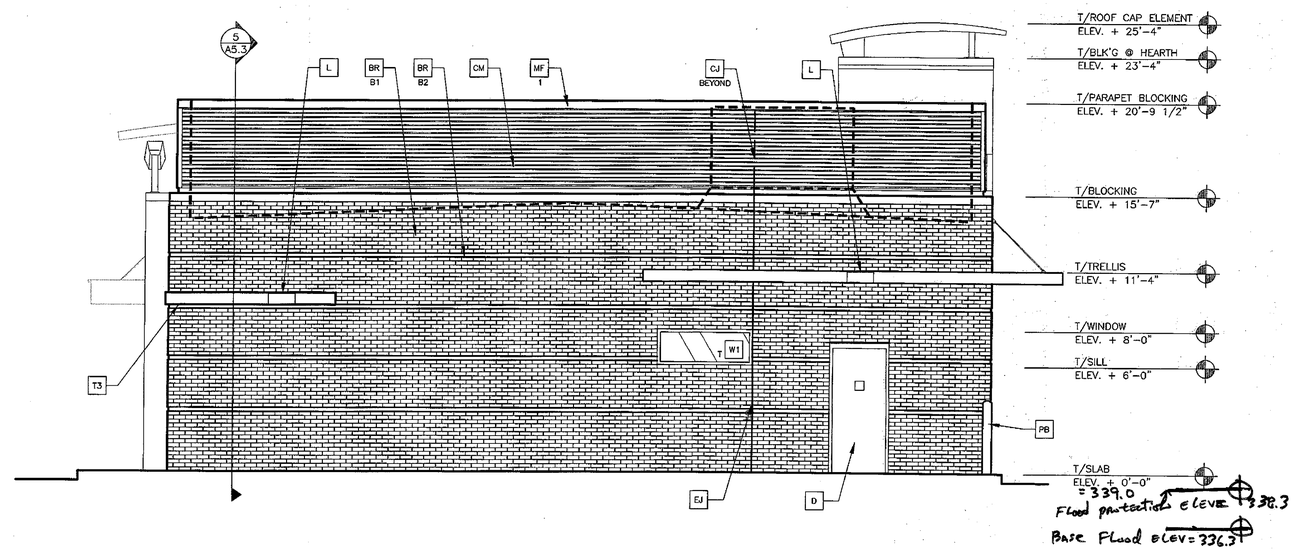

1 / A2.1 **REAR ELEVATION**
1/4" = 1'-0"

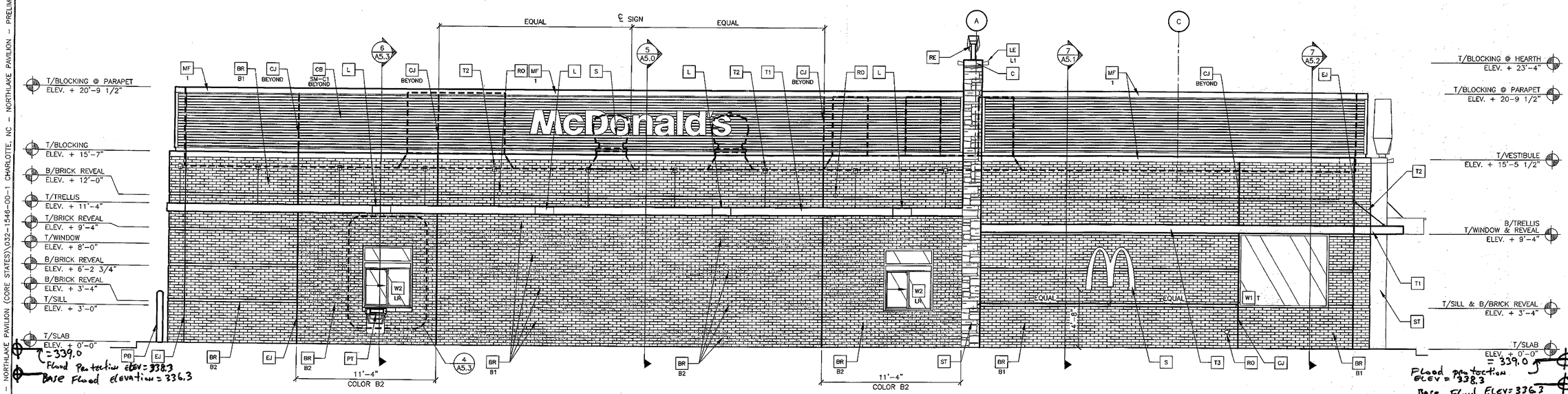

2 / A2.1 **DRIVE-THRU ELEVATION**
1/4" = 1'-0"

KEY NOTES:

BR FACEBRICK
B1 — COLOR:
B1 = "RUBIGO RED VELOUR" BY BELDEN OR EQUAL
B2 = "MODULAR MIDLAND BLEND A" BY BELDEN OR EQUAL

MF METAL FASCIA – COLOR TO MATCH CORRUGATED METAL PANEL – SEE 1/A5.0
TYPE: 1 = PRE-FAB ANCHOR-TITE FASCIA
2 = PRE-FAB CUSTOM ARCADE FASCIA
3 = PRE-FAB MASONRY CAP FASCIA

C1 ALUMINUM CANOPY SYSTEM (COLOR: YELLOW)

C2 ALUMINUM CANOPY TIE-BACK SYSTEM

CJ CONTROL JOINT, SEE DETAIL 7/A4.1

CM CORRUGATED METAL PANEL, COLOR = CITYSCAPE BY METAL ERA OVER SMOOTH FACE CONCRETE BLOCK – SEE 1A/A5.0

D HOLLOW METAL DOOR – PAINT TO MATCH COLOR OF SURROUNDING MATERIAL

E EXTERIOR INSULATION FINISH SYSTEM (E.I.F.S.) COLOR = BENJAMIN MOORE 2122-70 SNOW WHITE

EJ EXPANSION JOINT, SEE DETAIL 7/A4.1 (SIM.)

FB
CO2 — CO2= BULK CO2 FILL BOX (EQPM SCHEDULE ITEM 49.00)
BO= BULK OIL FILL BOX (EQPM SCHEDULE ITEM 700.18) – CONFIRM USE WITH MCD PROJECT MANAGER

L LIGHT FIXTURE (WALL SCONCE) – SEE ELECTRICAL

LE ACCENT LIGHTING – SEE ELECTRICAL
L1 — LED LIGHT:
L1 = UP AND DOWN FIXTURE
L2 = DOWN ONLY FIXTURE
L3 = INTEGRAL CANOPY FIXTURE

ML METAL LETTERING – BY OTHERS

PB PIPE BOLLARD – PAINTED YELLOW

PT (RMHC) COIN COLLECTOR

RE ROOF CAP ELEMENT BY OTHERS

RO ROOF DRAIN OVERFLOW PIPE PAINT TO MATCH SURROUNDING MATERIAL

S McDONALD'S SIGNAGE BY OTHERS – UNDER SEPARATE PERMIT.

ST CULTURED STONE: OWENS CORNING COBBLEFIELD COLOR = TEXAS CREME

T1 ALUMINUM TRELLIS

T2 TRELLIS TIE-BACK

T3 ALUMINUM TRELLIS 2" x 8" WALL FASCIA SYSTEM – REFER TO SIM. DETAIL 3/A5.1

W1 EXTERIOR WINDOW ASSEMBLY – SEE A5.0
T — T = TEMPERED GLASS

W2 DRIVE-THRU WINDOW BY READY ACCESS CONFIRM MODEL, OPTIONS, AND SIZE WITH MCD PROJECT MANAGER OPTIONS INCLUDE: TRANSOM (SHOWN)
XX — SLIDE DIRECTION: RL = RIGHT TO LEFT
LR = LEFT TO RIGHT

REV	DATE	DESCRIPTION	BY

PREPARED BY:

©2011 McDonald's USA, LLC

PREPARED FOR: **McDonald's USA, LLC**

These drawings and specifications are the confidential and proprietary property of McDonald's USA, LLC and shall not be copied or reproduced without written authorization. The contract documents were prepared for use on a specific site at a specific time. Any other documents are not suitable for use on a different site or at a later time. Use of these drawings for reference or example on another project requires the consent of McDonald's USA, LLC. Any modifications made without consent of the contract documents for reuse on another project is not authorized.

DRAWN BY	STD. ISSUE DATE
SPB	JULY 2011
REVIEWED BY	DATE ISSUED
MR	01 AUG 2011

TITLE: 2011 STANDARD BUILDING 4587-MASONRY/STEEL +5'F +5'R

DESCRIPTION: 8" MASONRY LOAD BEARING WALLS STEEL TRUSS ROOF FRAMING CULTURED STONE EXTERIOR FINISH ARCADE/ENTRY

SITE ID: 032-0135

SITE ADDRESS: 1010 N. MIAMI BLVD – WELLONS VILLAGE DURHAM, NC

SHEET NO. A2.1
032-0135-01.1
ELEVATIONS

K:\DM\EAST\ – RAL\032-1546-00-0 CHARLOTTE, NC – NORTHLAKE PAVILION (CORE STATES)\032-1546-00-1 CHARLOTTE, NC – NORTHLAKE PAVILION – PRELIMINARY\A-ELEV.DWG 08-01-2011 15:30

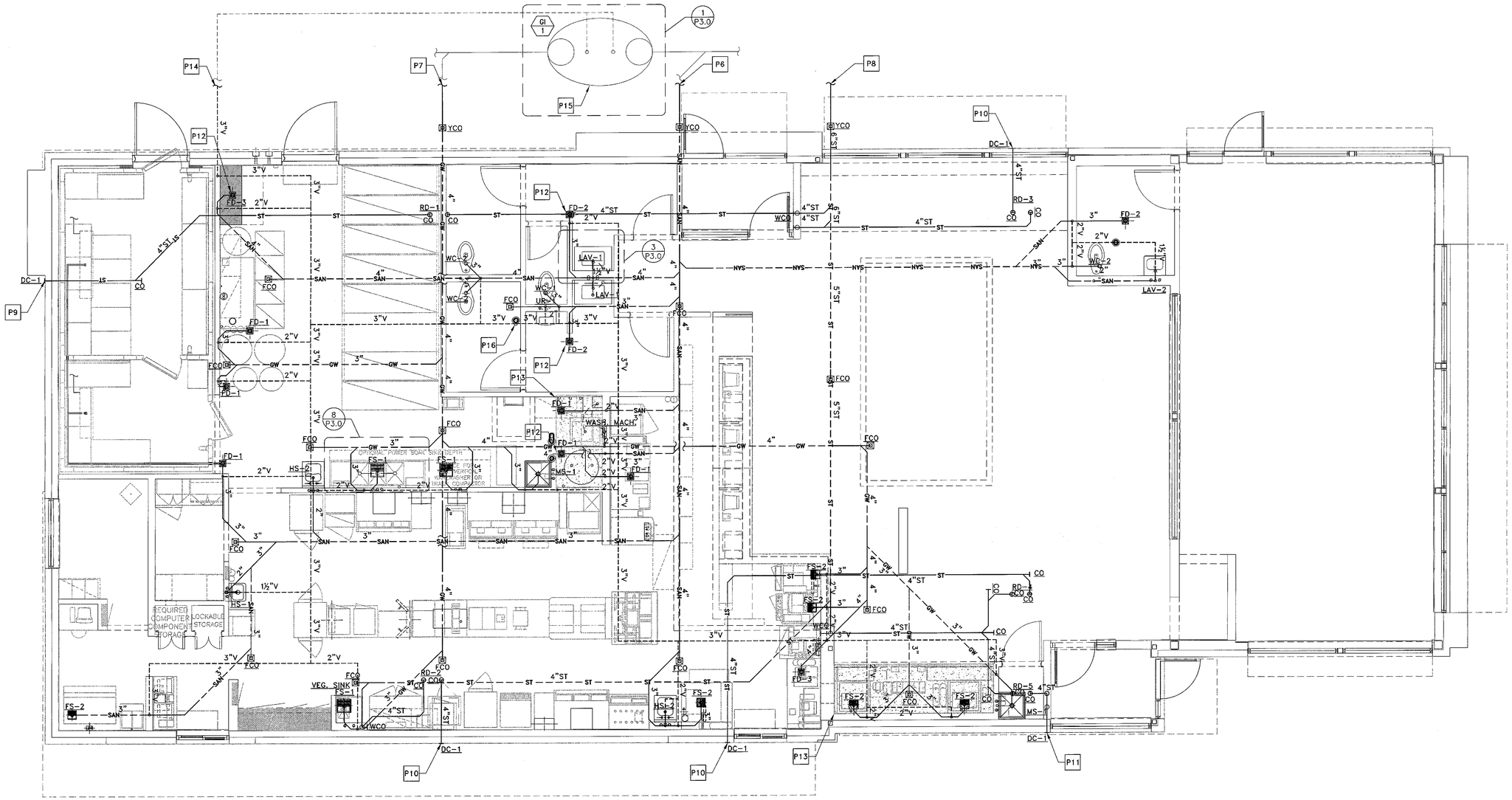

1 P1.2 **WASTE, VENT & STORM PIPING**

SCALE: 1/4" = 1'-0"

DRAWING NOTES

1. PIPING ROUTES ARE GENERAL AND MAY VARY DUE TO FIELD CONDITIONS. COORDINATE ALL PIPE ROUTES WITH OTHER TRADES.
2. WALL CLEAN-OUTS FOR WASTE PIPING NOT SHOWN FOR CLARITY. SEE GENERAL NOTES FOR REQUIREMENTS.
3. ONLY MAIN FLOOR CLEAN-OUTS ARE SHOWN FOR CLARITY. SEE GENERAL NOTES FOR REQUIREMENTS.
4. ALL HORIZONTAL STORM DRAINAGE PIPING SHALL BE INSULATED TO PREVENT CONDENSATION. INSULATION NOT SHOWN FOR CLARITY. SEE PLUMBING NOTES FOR INSULATION REQUIREMENTS.

KEYED NOTES

P6	SANITARY LINE TO SANITARY SEWER. SEE SITE PLAN FOR CONTINUATION.
P7	GREASE LINE TO EXTERIOR GREASE INTERCEPTOR. SEE SITE PLAN FOR CONTINUATION
P8	STORM LINE TO STORM SYSTEM. SEE SITE PLAN FOR CONTINUATION.
P9	TERMINATE OVERFLOW DRAIN AS HIGH AS POSSIBLE WITH DOWNSPOUT COVER.
P10	TERMINATE OVERFLOW DRAIN ABOVE TRELLIS WITH DOWNSPOUT COVER. BOTTOM OF DOWNSPOUT OUTLET PIPE SHALL BE AT LEAST 3" BUT NOT MORE THAN 8" ABOVE TOP OF TRELLIS.
P11	TERMINATE BOTTOM OF OVERFLOW DRAIN A MINIMUM OF 12" ABOVE GRADE WITH DOWNSPOUT COVER.
P12	PROVIDE PROSET TRAP GUARD® FOR FLOOR DRAIN.
P13	TOP OF CONCRETE SLAB IS 0'-6" A.F.F.
P14	VENT FROM GREASE INTERCEPTOR. SEE SITE PLAN FOR CONTINUATION. COORDINATE PIPE ROUTING WITH LOCATION OF GREASE INTERCEPTOR.
P15	GREASE INTERCEPTOR LOCATION SHOWN FOR REFERENCE ONLY. COORDINATE GREASE INTERCEPTOR LOCATION WITH CIVIL ENGINEER AND SITE CONTRACTOR.
P16	4"x5" VENT THROUGH ROOF

WASTE PIPE SIZING - IPC

FIXTURE TYPE	TRAP SIZE	DFU	QUANTITY	TOTAL
URINAL	2 IN.	4	1	4
WATER CLOSET	3 IN.	4	4	16
LAVATORY	1½ IN.	1	3	3
WASH SINK (HAND SINK)	1½ IN.	2	3	6
FLOOR DRAIN OR SINK	3 IN.	5	5	25
FLOOR DRAIN OR SINK	4 IN.	6	1	6
EMERGENCY FLOOR DRAIN (BATHROOMS)	3 IN.	0	3	0
			TOTAL	60

GREASE PIPE SIZING - IPC

SERVICE SINK (MOP SINK)	3 IN.	3	2	6
FLOOR DRAIN OR SINK	3 IN.	5	9	45
FLOOR DRAIN OR SINK	4 IN.	6	1	6
WASHING MACHINE	2 IN.	3	1	3
			TOTAL	60

STORM PIPE SIZING

RAINFALL = 4 IN./HR

VERTICAL LEADERS

ROOF DRAIN	ROOF AREA SQ. FT.	SIZE IN.
RD-1	1,372	4
RD-2	1,302	4
RD-3	1,145	4
RD-4	404	4
RD-5	691	4
TOTAL	4,914	

HORIZONTAL PIPING (SLOPE ¼" PER FOOT)

ROOF DRAIN	ROOF AREA SQ. FT.	SIZE IN.
RD-4 & RD-5	1,095	4
RD-2, RD-4 & RD-5	2,397	5
RD-1, RD-2, RD-4 & RD-5	3,769	6
RD-1, RD-2, RD-3, RD-4 & RD-5	4,914	6

NOT FOR CONSTRUCTION - FOR REFERENCE ONLY

REV	DATE	DESCRIPTION	BY

PREPARED BY:

PREPARED FOR: McDonald's USA, LLC

© 2012 McDonald's USA, LLC

These drawings and specifications are the confidential and proprietary property of McDonald's USA, LLC and shall not be copied or reproduced without written permission. They are prepared and provided for use on this specific site in conjunction with its issue date and are not suitable for use on a different site or at a later time. Use of these drawings for purposes other than those provided for without the services of properly licensed architects and engineers. Reproduction of the contract documents for reuse on another project is not authorized.

DRAWN BY: –

STD ISSUE DATE: 2012_Q4

REVIEWED BY: –

DATE ISSUED: MM DD YYY

TITLE: 2011 STANDARD BUILDING 4587PP-WOOD/WOOD

DESCRIPTION: WOOD BEARING WALLS W/4" BRICK EXTERIOR FINISH WOOD ROOF TRUSS FRAMING E.I.F.S. EXTERIOR FINISH ARCADE/ENTRY

SITE ID: XXX-XXXX

SITE ADDRESS

SHEET NO. 00-0000.00.0 P1.2

WASTE, VENT & STORM PIPING

K:\STD\STANDARD\PRELIM\2011 STANDARD BUILDINGS - APRIL 2012 RELEASE\4587 WW PP - FULL SET\DWG\PLUM.DWG 04-26-2012 12:10