NORTH CAROLINA

DURHAM COUNTY

**DESIGN BUILD UTILITY AGREEMENT**

DATE: 12/17/2014

NORTH CAROLINA DEPARTMENT OF TRANSPORTATION

AND

WBS Element: 17BP.5.R.46

CITY OF DURHAM

THIS AGREEMENT is made and entered into on the last date executed below, by and between the North Carolina Department of Transportation, an agency of the State of North Carolina, hereinafter referred to as the "Department" and the City of Durham, hereinafter referred to as the "Municipality";

WITNESSETH:

WHEREAS, the Department has prepared and adopted plans to make certain street and highway improvements under Project 17BP.5.R.46 in Durham County, said plans consists of replacing Bridge No. 93 Over Rocky Creek on SR 1945; said project having a right-of-way width as shown on the project plans on file with the Department's office in Raleigh, North Carolina; and,

WHEREAS, the parties hereto wish to enter into an agreement for certain utility work to be performed by the Department's construction contractor with full reimbursement by the Municipality for the costs thereof as hereinafter set out.

NOW, THEREFORE, it is agreed as follows:

1. As requested by the Municipality, the Department shall issue a supplemental lump-sum agreement for Project 17BP.5.R.46 for the design build contractor to install water and sewer lines. Said work shall be accomplished in accordance with the attached estimate (Exhibit A), plans (Exhibit B), and the project supplemental agreement between the Department and the design-build contractor.

2. The Municipality shall be responsible for the entire lump-sum cost as shown on the attached Exhibit "A". The lump-sum cost to the Municipality is $240,000. The Municipality shall reimburse the Department for said costs as follows:

A. Upon completion of the highway work, the Department shall submit a lump-sum invoice to the Municipality for cost incurred. Billing will be based upon the approved lump-sum cost.

B. Reimbursement shall be made by the Municipality in one final payment within sixty (60) days of said invoice.

C. If the Municipality does not pay said invoice within sixty (60) days of the date of the invoice, the Department shall charge interest on any unpaid balance at a variable rate of the prime plus (1%) in accordance with G.S. 136-27.3.

D. Said interest rate shall be set upon final execution of the Agreement by the Department. The Municipality will be notified of the set interest rate by the Department's approval letter upon receipt of the fully executed agreement.

E. Any cost incurred due to additional utility work requested by the Municipality after award of the construction contract, shall be solely the responsibility of the Municipality. The Municipality shall reimburse the Department 100% of the additional utility cost.

3. In the event the Municipality fails for any reason to pay the Department in accordance with the provisions for payment hereinabove provided, North Carolina General Statute 136-41.3 authorizes the Department to withhold so much of the Municipality's share of funds allocated to said Municipality by North Carolina General Statute, Section 136-41.1, until such time as the Department has received payment in full.

4. Upon the satisfactory completion of the installation of the utility work covered under this Agreement, the Municipality shall assume normal maintenance operations. Upon completion of the construction of the highway project, the Municipality shall release the Department from any and all claims for damages in connection with adjustments made; and, further, the Municipality shall release the Department of any future responsibility for the cost of maintenance to the lines. Said releases shall be deemed to be given by the Municipality upon completion of construction of the project and its acceptance by the Department from its contractor unless the Municipality notifies the Department, in writing, to the contrary prior to the Department's acceptance of the project.

5. It is further agreed that the following provisions shall apply regarding the utilities covered in this Agreement.

   A. The Municipality obligates itself to service and to maintain its facilities to be retained and installed over and along the highway within the Department's right-of-way limits in

accordance with the mandate of the North Carolina General Statutes and such other laws, rules, and regulations as have been or may be validly enacted or adopted, now or hereafter.

B. If at any time the Department shall require the removal of or changes in the location of the encroaching facilities which are being relocated at the Municipality's expense, the Municipality binds itself, its successors and assigns, to promptly remove or alter said facilities, in order to conform to the said requirement (if applicable per G.S. 136-27.1), without any cost to the Department.

6. By Executive Order 24, issued by Governor Perdue, and N.C. G.S.§ 133-32, it is unlawful for any vendor or contractor ( i.e. architect, bidder, contractor, construction manager, design professional, engineer, landlord, offeror, seller, subcontractor, supplier, or vendor), to make gifts or to give favors to any State employee of the Governor's Cabinet Agencies (i.e., Administration, Commerce, Correction, Crime Control and Public Safety, Cultural Resources, Environment and Natural Resources, Health and Human Services, Juvenile Justice and Delinquency Prevention, Revenue, Transportation, and the Office of the Governor).

IN WITNESS WHEREOF, this Agreement has been executed, in duplicate, the day and year heretofore set out, on the part of the Department and the Municipality by authority duly given.

L.S. ATTEST:

BY: _____

TITLE: _____

CITY OF DURHAM

BY: _____

TITLE: _____

DATE: _____

N.C.G.S. § 133-32 and Executive Order 24 prohibit the offer to, or acceptance by, any State Employee of any gift from anyone with a contract with the State, or from any person seeking to do business with the State. By execution of any response in this procurement, you attest, for your entire organization and its employees or agents, that you are not aware that any such gift has been offered, accepted, or promised by any employees of your organization.

Approved by _____ of the local governing body of the City of Durham as attested to by the signature of Clerk of said governing body on _____ (Date)

(SEAL)

This instrument has been pre-audited in the manner required by the Local Government Budget and Fiscal Control Act.

_____
(FINANCE OFFICER)

Federal Tax Identification Number

_____

Remittance Address:

City of Durham

_____

_____

DEPARTMENT OF TRANSPORTATION

BY: _____
(CHIEF ENGINEER)

DATE: _____

APPROVED BY BOARD OF TRANSPORTATION ITEM O: _____ (Date)

EXHIBIT A

Utilities Estimate - City of Durham
17BP.5.R.46
Replacement of Bridge No. 93 over Rocky Creek on SR 1945

| Item No. | Description | Quantity | Unit | Cost |
|---|---|---|---|---|
| 1 | Design | 1 | LS | $ 70,000.00 |
| 2 | Sewer Line *(Includes sewer line, manholes, and casing)* | 1 | LS | $ 65,000.00 |
| 3 | Grinder Stations | 1 | LS | $ 50,000.00 |
| 4 | Waterline | 1 | LS | $ 55,000.00 |
| | | | Total | $ 240,000.00 |

Exhibit B
Sheet B-1

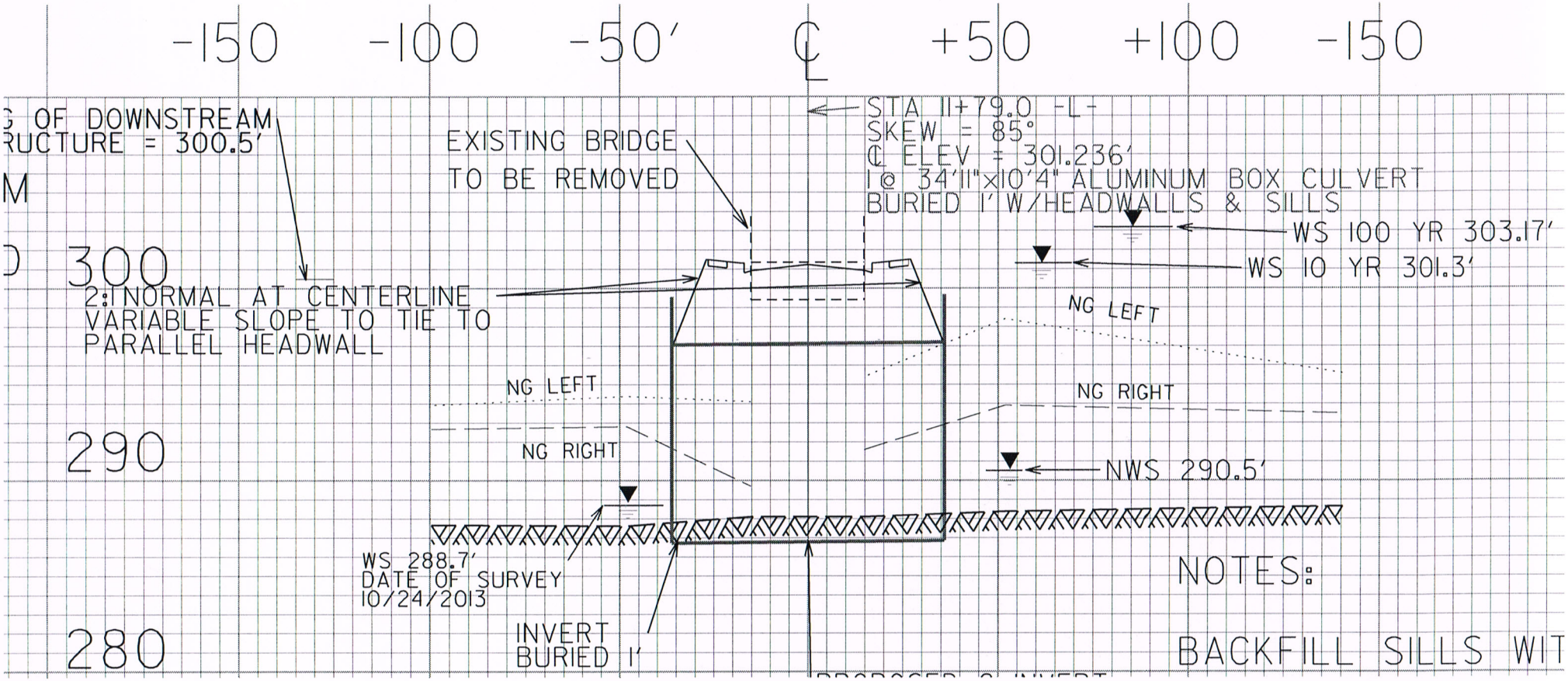

(125 CY)

5/14/99

| PROJECT REFERENCE NO. | SHEET NO. |
|---|---|
| DESIGNED BY: | |
| DRAWN BY: | |
| CHECKED BY: | |
| APPROVED BY: | |
| REVISED: | |

310093-2

NORTH CAROLINA DEPARTMENT OF TRANSPORTATION

UTILITIES/ENGINEERING SEC.
PHONE:(919)707-6690
FAX:(919)250-4151

UTILITY CONSTRUCTION PLANS ONLY

# UTILITY CONSTRUCTION

Exhibit B
Sheet B-2

NAD 83/NSRS 2007

MAY NEED PUMP

NEED PUMP

NO PUMP REQ'd

Proposed inverts of new SS if inv. at E culvert is 298.00 Assumes 0.45% slope

310093-2

JOHN C. BLACKWELL
DB 6802 PG 739
PB 134 PG 189
PB 133 PG 131

310093-1

WENDY BIVENS WILLIAMS
DB 2952 PG 422
PB 59 PG 34

POT Sta.10+00.00

120.00'
S 25°10'07" E

CEDRIC ROGERS
DB 4124 PG 2[illegible]
PB 113 PG [illegible]

MAJESTIC DR

EXISTING R/W

114.85'
S 65°49'53" W

IS BK D

PORCH

BK STEP

CONC

MH
TOP=310.70
8" IN=304.05 (SE)
8" IN=304.00 (NE)
8" OUT=303.95

316' @ 3.32% ±

EXISTING R/W

299.52 (330' from ℄ curv)

299.13 (230' from ℄ curv)

298.55

301.35

8" DIP

TO SR 1171 RIDDLE RD

70.00'

W/LT

310093-1(GPS)

EXISTING R/W

8" DIP

WABASH ST

SR 1945 S. ALSTON AVE. (BST) (VARIABLE WIDTH)
(RIGHT OF WAY VARIES)

BST
(CHURCH PARKING LOT)

APPROXIMATE EXISTING INVERTS

CHURCH OF THE ABIDING SAVIOUR
DB 311 PG 509
PB 12 PG 68

BM#
S 72°[illegible]'E 115.69' TO (310093-1)
ELEV.=317.91'
"[illegible] SET IN POWER POLE"

MH
TOP=301.42
8" IN=293.82
8" OUT=293.62

MH
TOP=301.81
8" IN=291.81
8" OUT=291.61

298.76 (170' from ℄ curv)

295.97

N 25°W

N 64°44'01" E
152.02'

TOP OF 8" DIP=291.17
(EXPOSED)

R/W=
292.07 out (1.24')

R/W=295.20± (1.50')

JS

TB

ROCKY CREEK

BZ 1

BZ 2

287

WOODS

BM#2

MH
TOP=298.88
24" IN = 288.52
24" OUT = 288.48
8" IN = 288.46

MH
TOP=300.92
8" IN=290.92 (SE)
8" IN=290.22 (NE)
8" OUT=290.12

12" DIP

8" DIP

CB

CB

ELEV 298.0 +/-

24" RCP

C

F FES

PDE

MH
TOP=301.58
8" IN=290.52
8" OUT=290.12

303.87'
N 64°44'01" E

TOP OF 8" DIP=291.08
(EXPOSED)

310093-3

CHURCH OF THE ABIDING SAVIOUR
DB 311 PG 509
PB 12 PG 68

310093-4

CITY OF DURHAM
DB 1635 PG 262
PB 124 PG 150

Sta.= 11+25 to 11+65 rt
Q= 26.8 CFS
V= 5.0 FPS
d= 1.1 FT
s= 6.0%
n=0.057

IMPERVIOUS DIKE #1

## DETAIL 1
LATERAL BASE DITCH
( Not to Scale)

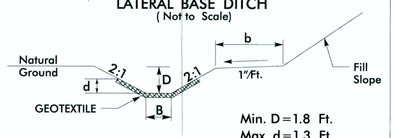


Min. D=1.8 Ft.
Max. d=1.3 Ft.
B=3.0 Ft.
b=5.0 Ft.

*When B is < 6.0'
Type of Liner=CL II Rip-Rap

FROM STA. 11+25 TO STA. 11+65 (RT)

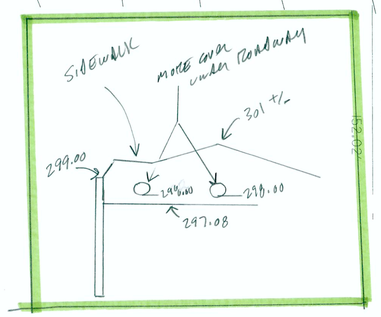


SS EXHIBIT 2

MW2
7/8/14

= EXIST. SS
= EXIST W

REVISIONS

J:\5A\310093\27\Roadways\rdy_ut\Proj\310093_ut_rdy4_U02_psh.dgn
7/7/2014 12:15:11 PM

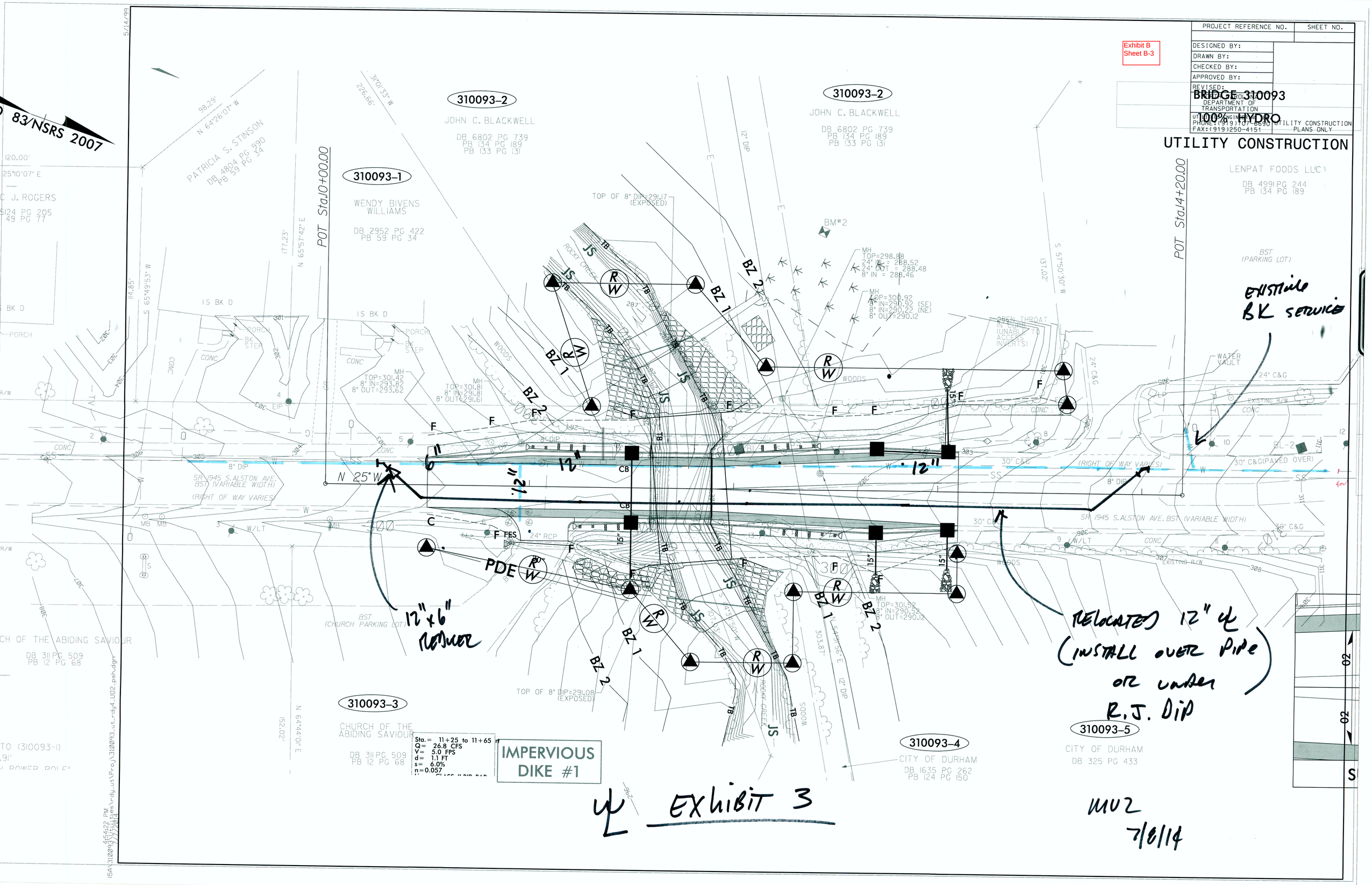

Exhibit B
Sheet B-3
PROJECT REFERENCE NO.
SHEET NO.
DESIGNED BY:
DRAWN BY:
CHECKED BY:
APPROVED BY:
REVISED:
BRIDGE 310093
100% HYDRO
DEPARTMENT OF TRANSPORTATION
PHONE:(919)707-6690
FAX:(919)250-4151
UTILITY CONSTRUCTION PLANS ONLY
UTILITY CONSTRUCTION
83/NSRS 2007
310093-2
JOHN C. BLACKWELL
DB 6802 PG 739
PB 134 PG 189
PB 133 PG 131
310093-1
WENDY BIVENS WILLIAMS
DB 2952 PG 422
PB 59 PG 34
PATRICIA S. STINSON
DB 4804 PG 990
PB 59 PG 34
LENPAT FOODS LLC
DB 4991 PG 244
PB 134 PG 189
POT Sta.10+00.00
POT Sta.14+20.00
BM#2
TOP OF 8" DIP=291.17 (EXPOSED)
TOP OF 8" DIP=291.08 (EXPOSED)
BST (PARKING LOT)
BST (CHURCH PARKING LOT)
SR 1945 S.ALSTON AVE. BST (VARIABLE WIDTH)
(RIGHT OF WAY VARIES)
N 25° W
6"
12"
12"
12"
PDE
BZ 1
BZ 2
JS
R/W
WOODS
ROCKY CREEK
EXISTING BK SERVICE
12"x6" REDUCER
RELOCATED 12" ℄ (INSTALL OVER PIPE OR UNDER R.J. DIP)
310093-3
CHURCH OF THE ABIDING SAVIOUR
DB 311 PG 509
PB 12 PG 68
310093-4
CITY OF DURHAM
DB 1635 PG 262
PB 124 PG 150
310093-5
CITY OF DURHAM
DB 325 PG 433
Sta. = 11+25 to 11+65
Q = 26.8 CFS
V = 5.0 FPS
d = 1.1 FT
s = 6.0%
n = 0.057
IMPERVIOUS DIKE #1
℄ EXHIBIT 3
MUZ
7/8/14