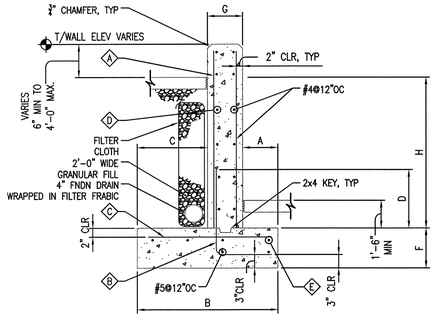

HEIGHT (MAX)	A	B	C	D	F	G	A	B	C	D	E
4'-0"	10"	3'-0"	1'-2"	2'-5"	1'-0"	1'-0"	#4@16"OC	#4@16"OC	#4@16"OC	#4@12"OC	(4)#4
6'-0"	1'-0"	4'-0"	2'-0"	2'-5"	1'-0"	1'-0"	#4@12"OC	#4@12"OC	#4@12"OC	#4@12"OC	(6)#4
8'-0"	1'-4"	5'-0"	2'-8"	3'-0"	1'-0"	1'-0"	#4@12"OC	#5@12"OC	#5@12"OC	#4@12"OC	(5)#5
10'-0"	1'-8"	6'-6"	3'-10"	4'-0"	1'-4"	1'-0"	#4@9"OC	#5@9"OC	#5@9"OC	#4@12"OC	(7)#5
12'-0"	2'-3"	8'-0"	4'-9"	5'-0"	1'-4"	1'-0"	#4@8"OC	#6@8"OC	#6@9"OC	#4@12"OC	(8)#6
14'-0"	3'-0"	10'-0"	5'-9"	6'-0"	1'-6"	1'-3"	#5@9"OC	#7@9"OC	#7@9"OC	#4@12"OC	(9)#6
16'-0"	3'-0"	12'-6"	8'-3"	7'-0"	1'-6"	1'-3"	#7@8"OC	#9@8"OC	#7@8"OC	#4@12"OC	(12)#6

1 / C300 SECTION NTS

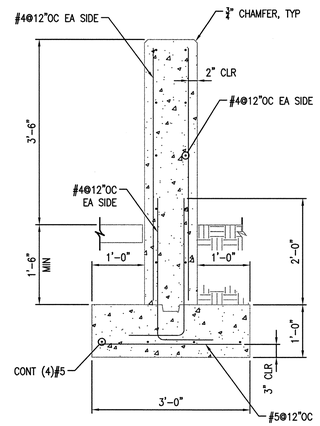

2 / C300 SECTION ¾"=1'-0"

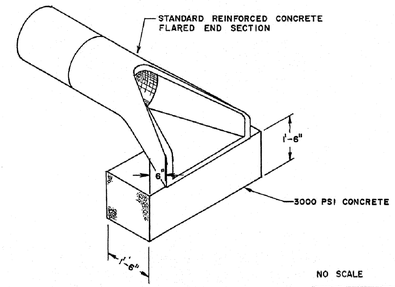

NO SCALE

TITLE
FLARED END SECTION

FLARED END SECTION DETAIL
N.T.S.

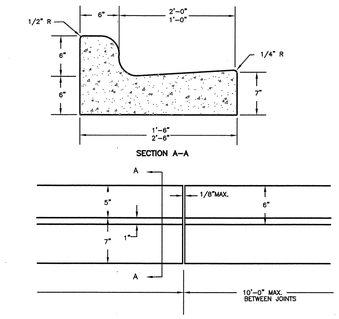

STANDARD 18" OR 30" CURB AND GUTTER SECTION
NTS

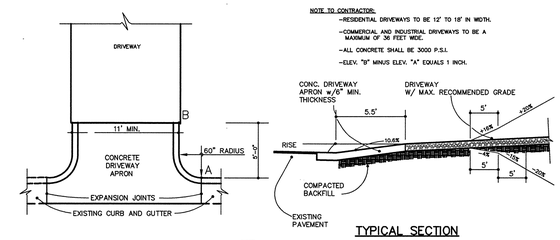

PLAN VIEW
N.T.S.

TYPICAL SECTION
N.T.S.

NOTE TO CONTRACTOR:
- RESIDENTIAL DRIVEWAYS TO BE 12' TO 18' IN WIDTH.
- COMMERCIAL AND INDUSTRIAL DRIVEWAYS TO BE A MAXIMUM OF 30 FEET WIDE.
- ALL CONCRETE SHALL BE 3000 P.S.I.
- ELEV. "B" MINUS ELEV. "A" EQUALS 1 INCH.

NOTE:
1. BEGINNING RADIUS SHALL NOT ENCROACH ON ADJACENT PROPERTIES BASED ON A PROJECTION OF THE PROPERTY LINE FROM THE RIGHT OF WAY TO THE CURB LINE.
2. THE TOWN IS NOT RESPONSIBLE FOR VEHICLES THAT DRAG DUE TO GRADE OF DRIVEWAY. THE DRIVEWAY IS PRIVATELY MAINTAINED.

STANDARD DRIVEWAY APRON

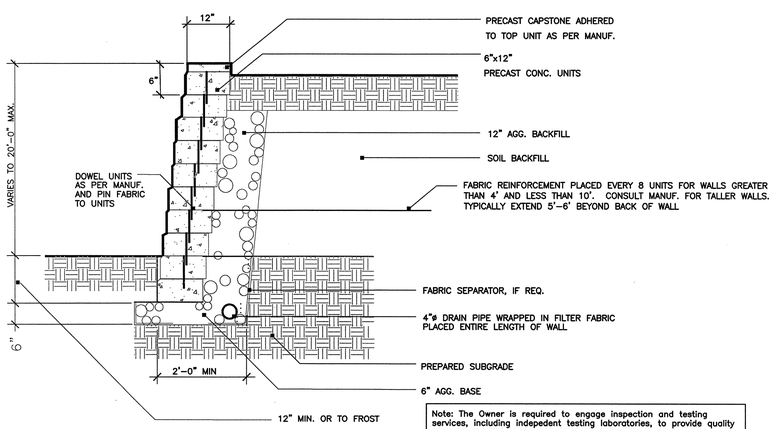

Note: The Owner and their contractor is required to ensure that a Professional Engineer registered in the State of North Carolina design, prepare, stamp and sign a set of shop drawings for this retaining wall prior to the installation of this wall on site.

Note: The Owner is required to engage inspection and testing services, including indepedent testing laboratories, to provide quality assurance and testing services throughout the construction of all retaining walls. Testing and inspections services shall only be performed by qualified and experienced technicians and engineers. As a minimum, quality assurance testing should include foundation soil inspection, soil backfill testing, verification of design parameters, and observation of construction for general compliance with design drawings and specifications.

CONCRETE UNIT RETAINING WALL
N.T.S.

NOTE:
STRUCTURAL STONE SHALL BE (CLASS "B") STONE FOR EROSION CONTROL PURPOSES.
SEDIMENT CONTROL STONE SHALL BE NO. 5 OR NO. 57 STONE.

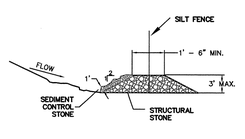

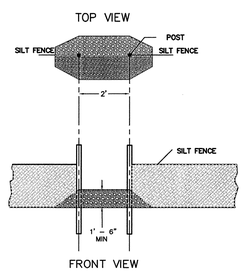

STONE OUTLET DETAIL
NTS

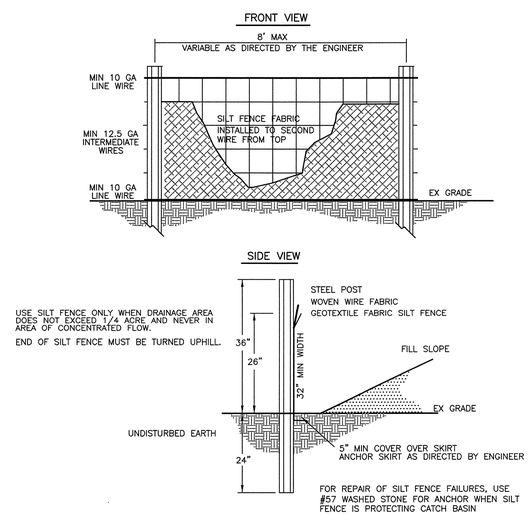

SILT FENCE
N.T.S.

ROUGHTON • NICKELSON • DE LUCA
Architects, PA
3608 University Drive, Suite 204
Durham, NC 27707
T 919.490.1266 F 919.490.1396
www.RNDpa.com

ROUGHTON NICKELSON DE LUCA ARCHITECTS, PA
REGISTERED ARCHITECTURAL CORPORATION
CERT. NO. 400
NORTH CAROLINA
DURHAM, N.C.

421 FAYETTEVILLE STREET
SUITE 400
RALEIGH, NC 27601
T 919.380.8750
F 919.380.8752
www.stewart-eng.com
STEWART
Project No. C7043

©2007 All documents and calculations including computer files, drawings, and specifications prepared by Stewart Engineering, Inc. are instruments of professional service and are the property of Stewart Engineering, Inc. Copyright and other property rights have and shall remain the property of Stewart Engineering, Inc. These shall not be re-coded, modified, or changed in any manner whatsoever nor assigned to a third party without prior written authorization of Stewart Engineering, Inc.

NORTH CAROLINA PROFESSIONAL SEAL 15834 ENGINEER RYAN PAUL LOWENKRON
12-17-08

City of Durham-Salt Dome

Camden Avenue
Durham, NC

REVISIONS

FINAL COD CONSTRUCTION DRAWINGS SUBMITTAL	12-17-2008

© 2007 Roughton Nickelson De Luca Architects, P.A. These drawings and specifications are instruments of service and as such remain the property of the architect. Their use is restricted to the original site for which they were prepared and publication thereof is expressly limited to such use. Re-use, reproduction, or publication by any method, in whole or in part, is prohibited.

JOB NUMBER:	C7043
DRAWN:	ACP
CHECKED:	RPL
DATE:	08-19-2008

DETAILS

C901